MSD100LB-4/6 2,2/0,75KW 400V B5

Three-phase asynchronous motor in aluminum

Motor type	MSD100LB-4/6 2,2/0,75KW 400V B5
Brand	BUSCK
Item number	X30C1012

Voltage V	Power kW	Frequency Hz	Current A	Speed rpm
400	2,2/0,75	50	4,83/2,31	1425/950

Duty	S1		
Enclosure	IP55	Efficiency, load 100%	80,1/69,1
Insulation class	F		
Cooling	IC411 (TEFC)	Painting	Standard
Max. ambient temp.	40°C	Color	RAL 9005
Min. ambient temp.	-20°C	Weight kg	20
Max. temp. rise	80 K	Bearing DE	6206-2Z/C3
Max altitude, masl	1000	Bearing NDE	6206-2Z/C3
		Balance grade	Normal
Torque, Nm	14,5/7,5	Cable entries	1xM20
Starting current ratio	6,5/4,3		

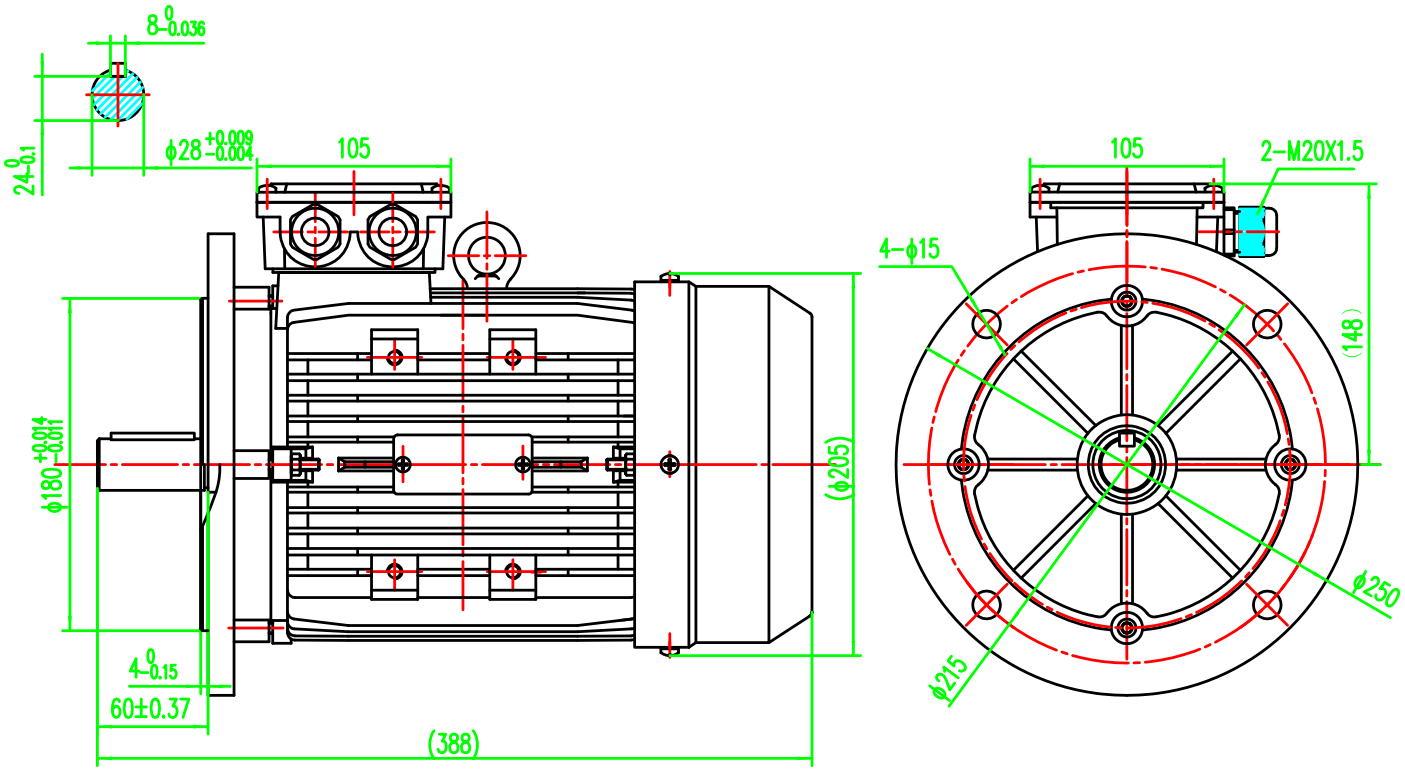

BUSCK
www.busck.eu

Busck & Co AB
Gamla Riksvägen 14
428 32 Göteborg
Sweden
556027-1990
info@busck.se

Busck & Co ApS
Postboks 108
0900 København C
Denmark
info@busck.eu

Busck AS
Skibåsen 35C
4636 Kristiansand
Norway
info@busck.no