MSD160LB-4/8 15/3,2KW 400V B3

Three-phase asynchronous motor in aluminum

Motor type	MSD160LB-4/8 15/3,2KW 400V B3
Brand	BUSCK
Item number	X30B1621

Voltage V	Power kW	Frequency Hz	Current A	Speed rpm
400	15/3,2	50	29,1/11,0	1470/725

Duty	S1		
Enclosure	IP55	Efficiency, load 100%	89,6/82,3
Insulation class	F		
Cooling	IC411 (TEFC)	Painting	Standard
Max. ambient temp.	40°C	Color	RAL 9005
Min. ambient temp.	-20°C	Weight kg	105
Max. temp. rise	80 K	Bearing DE	6309-2Z/C3
Max altitude, masl	1000	Bearing NDE	6309-2Z/C3
		Balance grade	Normal
Torque, Nm	97/45	Cable entries	2xM32 + 1xM16
Starting current ratio	7,5/4		

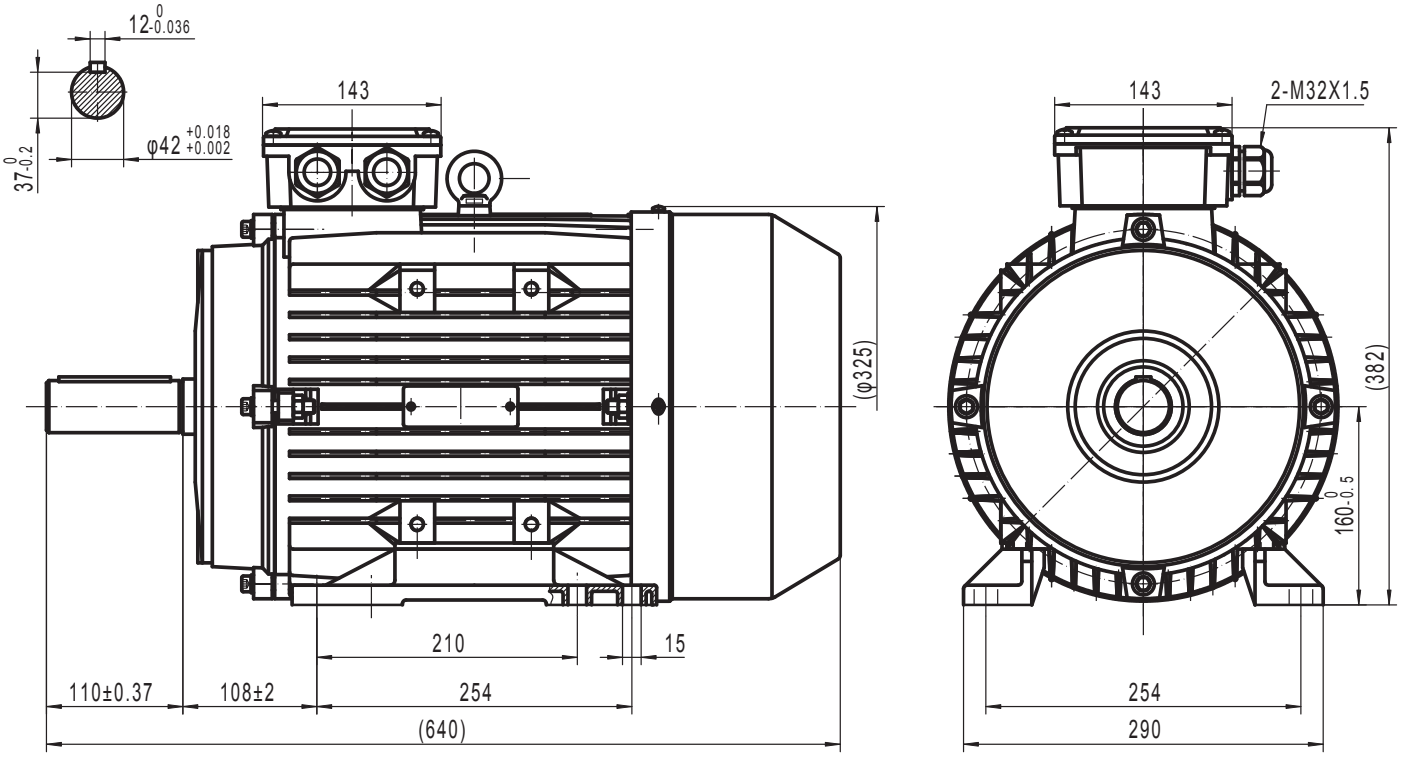

BUSCK
www.busck.eu

Busck & Co AB
Gamla Riksvägen 14
428 32 Göteborg
Sweden
556027-1990
info@busck.se

Busck & Co ApS
Postboks 108
0900 København C
Denmark
info@busck.eu

Busck AS
Skibåsen 35C
4636 Kristiansand
Norway
info@busck.no