MS80B-4 0,75KW 230/400V B14 ATEX ZON 2/22

Three-phase asynchronous motor in aluminum

Motor type	MS80B-4 0,75KW 230/400V B14 ATEX ZON 2/22
Brand	BUSCK
Item number	Q3040813

Voltage V	Power kW	Frequency Hz	Current A	Speed rpm
230	0,75	50	3,36	1380
400	0,75	50	1,93	1380
460	0,86	60	1,93	1656

Duty	S1	Efficiency class	IE1
Enclosure	IP65	Efficiency, load 100%	72
Insulation class	F	Power fact, load 100%	0,78
Cooling	IC411 (TEFC)		
Max. ambient temp.	40°C	Painting	Standard
Min. ambient temp.	-20°C	Color	RAL 9005
Max. temp. rise	80 K	Weight kg	9,1
Max altitude, masl	1000	Sound pressure Lp dB(A)	58
		Bearing DE	6204-2Z/C3
Torque, Nm	5,19	Bearing NDE	6204-2Z/C3
Starting torque ratio	2,2	Balance grade	Normal
Pull up torque ratio	1,5	Inertia kgm2	0,0015
Pull out torque ratio	2,4	Cable entries	Metal cable gland 1xM20
Starting current ratio	6		

Note

ATEX II 3 D Ex tc IIIC T125°C Dc ZONE 22
ATEX II 3 G Ex nA IIC T4 Gc ZONE 2
IP65, Termistorer

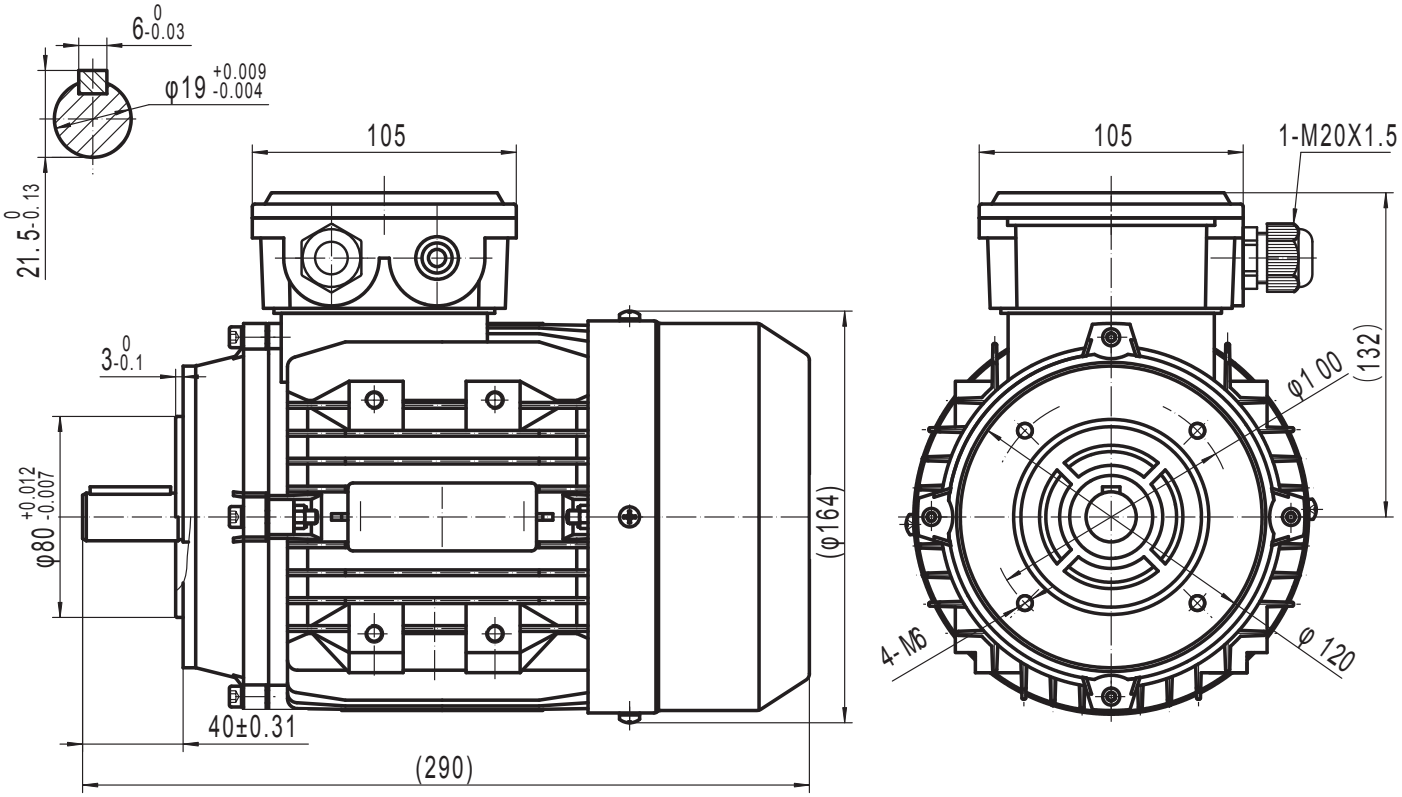

BUSCK
www.busck.eu

Busck & Co AB
Gamla Riksvägen 14
428 32 Göteborg
Sweden
556027-1990
info@busck.se

Busck & Co ApS
Postboks 108
0900 København C
Denmark
info@busck.eu

Busck AS
Skibåsen 35C
4636 Kristiansand
Norway
info@busck.no