T3A112MB-4 5,5KW 230/400V B34

Three-phase asynchronous motor in aluminum

Motor type	T3A112MB-4 5,5KW 230/400V B34
Brand	BUSCK
Item number	P3A41125

Voltage V	Power kW	Frequency Hz	Current A	Speed rpm
230	5,5	50	19,3	1450
400	5,5	50	11,1	1450
460	6,33	60	11,1	1740

Duty	S1	Efficiency class	IE3
Enclosure	IP55	Efficiency, load 100%	89,6
Insulation class	F	Efficiency, load 75%	89,9
Cooling	IC411 (TEFC)	Efficiency, load 50%	89,1
Max. ambient temp.	40°C	Power fact, load 100%	0,80
Min. ambient temp.	-20°C		
Max. temp. rise	80 K	Painting	Standard
Max altitude, masl	1000	Color	RAL 9005
		Weight kg	39,1
Torque, Nm	36,22	Sound pressure Lp dB(A)	71
Starting torque ratio	3,8	Bearing DE	6306-2Z/C3
Pull up torque ratio	2,5	Bearing NDE	6206-2Z/C3
Pull out torque ratio	3,7	Balance grade	Normal
Starting current ratio	9,1	Inertia kgm2	0,048758
Winding protection	Thermocontacts	Cable entries	2xM25, 1xM16
Note	IE3, Termokontakter		

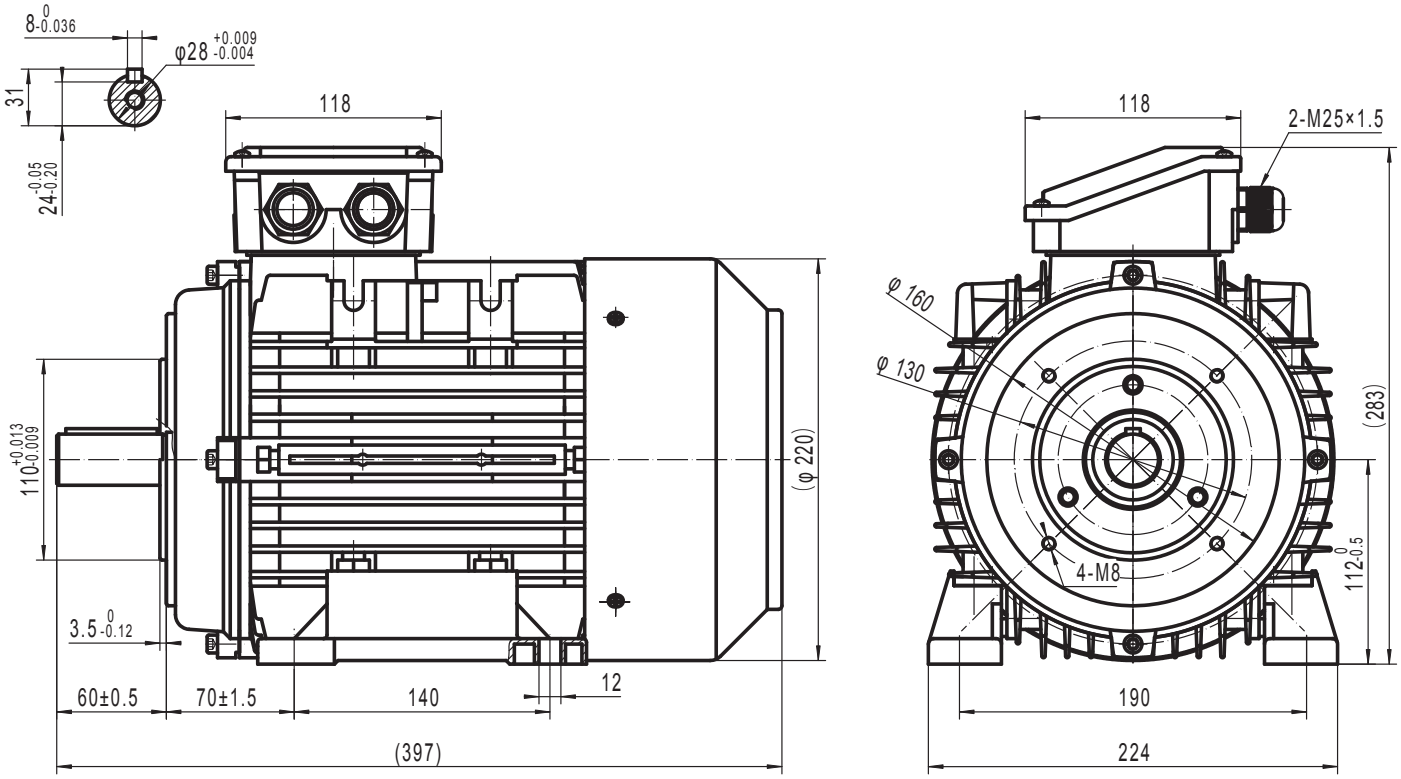

BUSCK
www.busck.eu

Busck & Co AB
Gamla Riksvägen 14
428 32 Göteborg
Sweden
556027-1990
info@busck.se

Busck & Co ApS
Postboks 108
0900 København C
Denmark
info@busck.eu

Busck AS
Skibåsen 35C
4636 Kristiansand
Norway
info@busck.no