MS132MB-2 10KW 230/400V B14

Three-phase asynchronous motor in aluminum

Motor type	MS132MB-2 10KW 230/400V B14
Brand	BUSCK
Item number	P3A21333

Voltage V	Power kW	Frequency Hz	Current A	Speed rpm
230	10	50		
400	10	50		
460	11,5	60		

Duty	S1	Efficiency class	IE3
Enclosure	IP55		
Insulation class	F	Painting	Standard
Cooling	IC411 (TEFC)	Color	RAL 9005
Max. ambient temp.	40°C	Weight kg	52,5
Min. ambient temp.	-20°C	Bearing DE	6308-2Z/C3
Max. temp. rise	80 K	Bearing NDE	6208-2Z/C3
Max altitude, masl	1000	Balance grade	Normal
		Cable entries	2xM25
Winding protection	Thermocontacts		

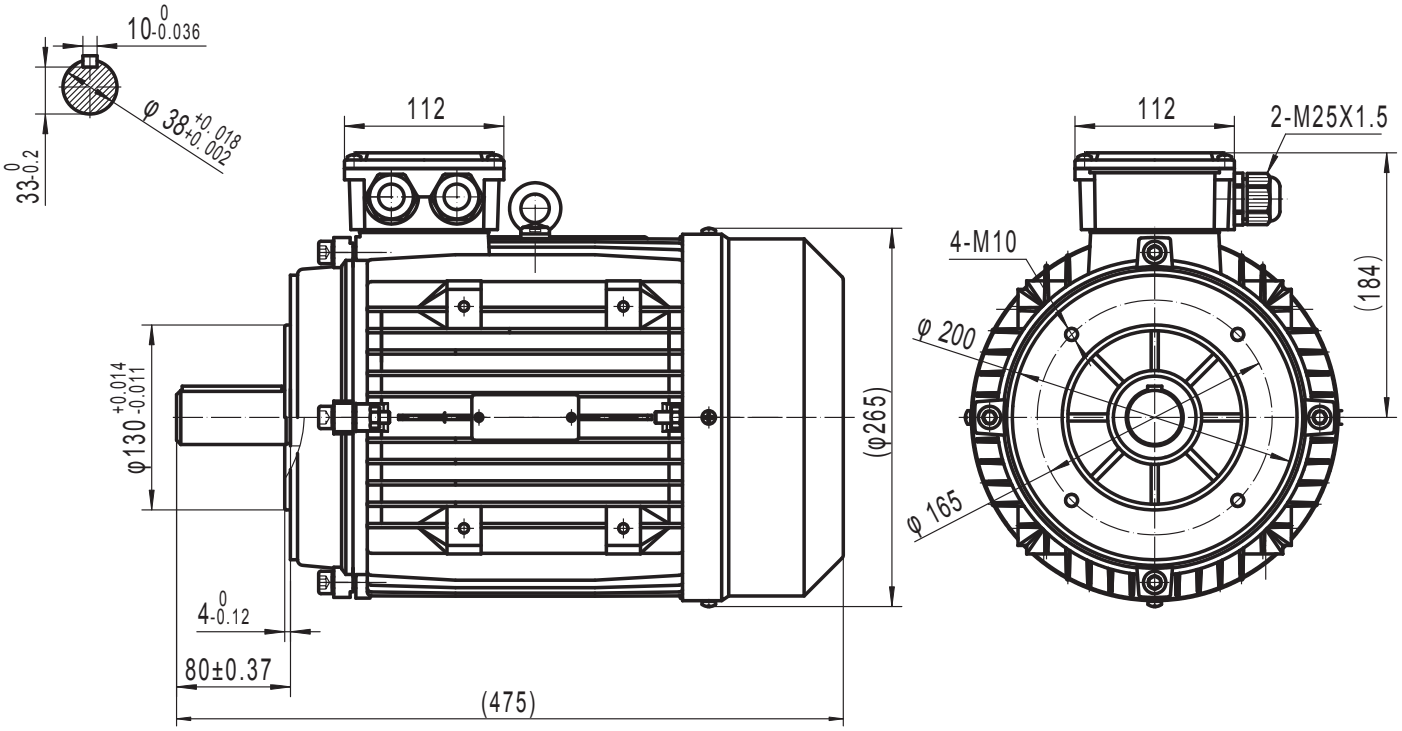

BUSCK
www.busck.eu

Busck & Co AB
Gamla Riksvägen 14
428 32 Göteborg
Sweden
556027-1990
info@busck.se

Busck & Co ApS
Postboks 108
0900 København C
Denmark
info@busck.eu

Busck AS
Skibåsen 35C
4636 Kristiansand
Norway
info@busck.no