T2A100LB-6 2,2KW 230/400V B35

Three-phase asynchronous motor in aluminum

Motor type	T2A100LB-6 2,2KW 230/400V B35
Brand	BUSCK
Item number	P3061004e

Voltage V	Power kW	Frequency Hz	Current A	Speed rpm
230	2,2	50	9,37	950
400	2,2	50	5,39	950
460	2,53	60	5,39	1140

Duty	S1		
Enclosure	IP55	Efficiency, load 100%	81,8
Insulation class	F	Efficiency, load 75%	82,6
Cooling	IC411 (TEFC)	Efficiency, load 50%	81,1
Max. ambient temp.	40°C	Power fact, load 100%	0,72
Min. ambient temp.	-20°C		
Max. temp. rise	80 K	Painting	Standard
Max altitude, masl	1000	Color	RAL 9005
		Weight kg	25
Torque, Nm	22,12	Sound pressure Lp dB(A)	64
Starting torque ratio	2,5	Bearing DE	6206-2Z/C3
Pull up torque ratio	2,1	Bearing NDE	6206-2Z/C3
Pull out torque ratio	2,7	Balance grade	Normal
Starting current ratio	5,5	Inertia kgm2	0,01153
		Cable entries	1xM20, 1xM16
Note	IE2		

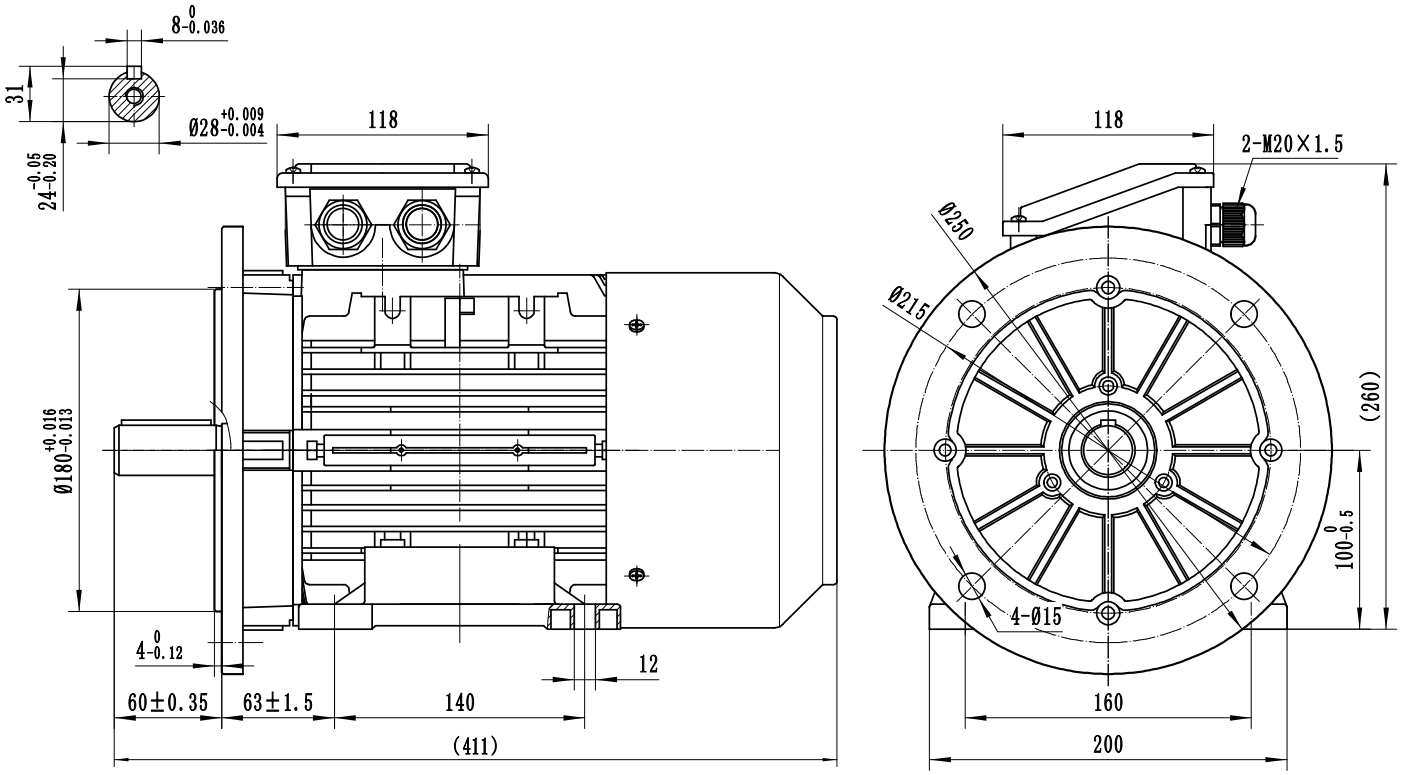

BUSCK
www.busck.eu

Busck & Co AB
Gamla Riksvägen 14
428 32 Göteborg
Sweden
556027-1990
info@busck.se

Busck & Co ApS
Postboks 108
0900 København C
Denmark
info@busck.eu

Busck AS
Skibåsen 35C
4636 Kristiansand
Norway
info@busck.no