T2A100LC-4 4KW 400/690V B35

Three-phase asynchronous motor in aluminum

Motor type	T2A100LC-4 4KW 400/690V B35
Brand	BUSCK
Item number	P3041004e

Voltage V	Power kW	Frequency Hz	Current A	Speed rpm
230	4	50	14,49	1440
400	4	50	8,33	1440
460	4,6	60	8,33	1728

Duty	S1		
Enclosure	IP55	Efficiency, load 100%	86,6
Insulation class	F	Efficiency, load 75%	87,4
Cooling	IC411 (TEFC)	Efficiency, load 50%	86,5
Max. ambient temp.	40°C	Power fact, load 100%	0,80
Min. ambient temp.	-20°C		
Max. temp. rise	80 K	Painting	Standard
Max altitude, masl	1000	Color	RAL 9005
		Weight kg	28,6
Torque, Nm	26,53	Sound pressure Lp dB(A)	65
Starting torque ratio	2,8	Bearing DE	6206-2Z/C3
Pull up torque ratio	2,3	Bearing NDE	6206-2Z/C3
Pull out torque ratio	3,2	Balance grade	Normal
Starting current ratio	7,2	Inertia kgm2	0,01106
		Cable entries	1xM20, 1xM16
Note	IE2		

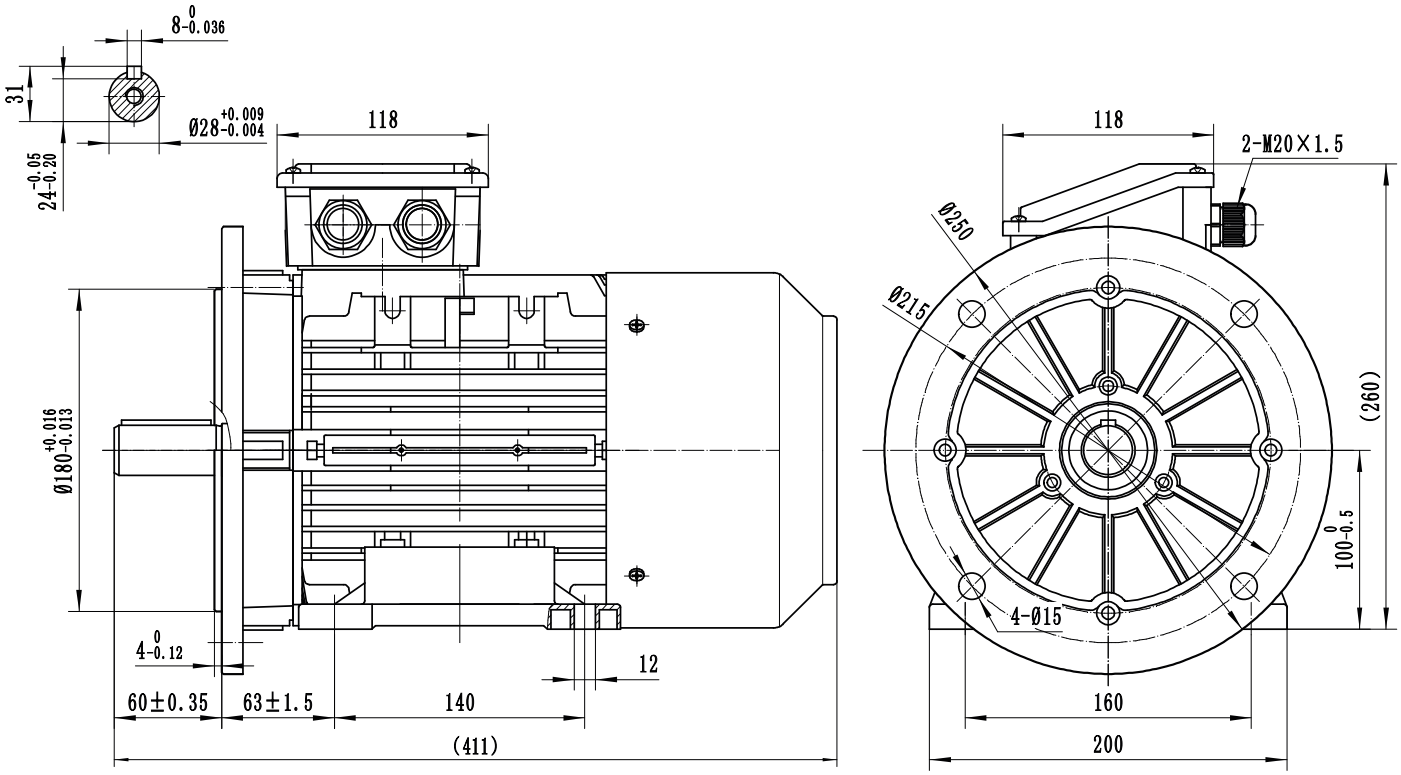

BUSCK
www.busck.eu

Busck & Co AB
Gamla Riksvägen 14
428 32 Göteborg
Sweden
556027-1990
info@busck.se

Busck & Co ApS
Postboks 108
0900 København C
Denmark
info@busck.eu

Busck AS
Skibåsen 35C
4636 Kristiansand
Norway
info@busck.no