MOTOR SPECIFICATION SHEET

SPECIFIC N°: OE080A4X2305P4U

MOTOR PART NR	OE080A4X2305P4U	CUSTOMER PART NR	-
DRAWING NR	OE080A4X2305P4U	MOTOR TYPE	OE080A42305P4U
Type of winding	3 PHASE 1 SPEED		
PROTECTION	II 2G Ex dbe IIC T54 Gb	CERTIFICATE	EPT 17 ATEX 2588X
IP PROTECTION	IP65	ENVIRONMENT CONDITIONS	-20 /+50°C Max Altitude: 1000m
POLES	4	NOMINAL POWER kW	0.55 0.66
Nom. Speed rpm	1390 1670	Voltage-Frequency	230/400V 50Hz 265/460V 60Hz Tolerance: Voltage ±5%
Nom. Current A	3/1.75 3/1.75	COS ϕ	0,71 0,71
Duty	S1 Continuous Duty	Direction of Rotation	BIDIRECTIONAL
Insulation Class	F	Mounting IM	B35
IEC Frame Size	80	Material end Shield/Flange	Aluminium
Material Terminal Box	Aluminium	Material Fan	Plastic nylon V6
Material Cover Fan	Zinc plated steel	Material shaft	Steel C43
DE Bearing Type	6204-ZZ	NDE Bearing Type	6204-ZZ
Position of terminal box	TOP	Cable gland Type	N.2 M20x1,5
Cable gland position (view from DE)	Right	Thermal protection	PTC130
Painting	-	Motor Colour	Not painted motor
Run capacitor μF	-	Start capacitor	-

In compliance with the EC Directives
2014/34/UE (ATEX)
2014/30/UE (EMC)
2006/42/EC (Machinery)
2011/65/CE (RoHS II)

and comply with the following Standards
EN 60079-0, 1, 7
EN 60034-1,2,5,6,7,9,12,14,
IEC60072-1,
EN 60259

Overall dimensions

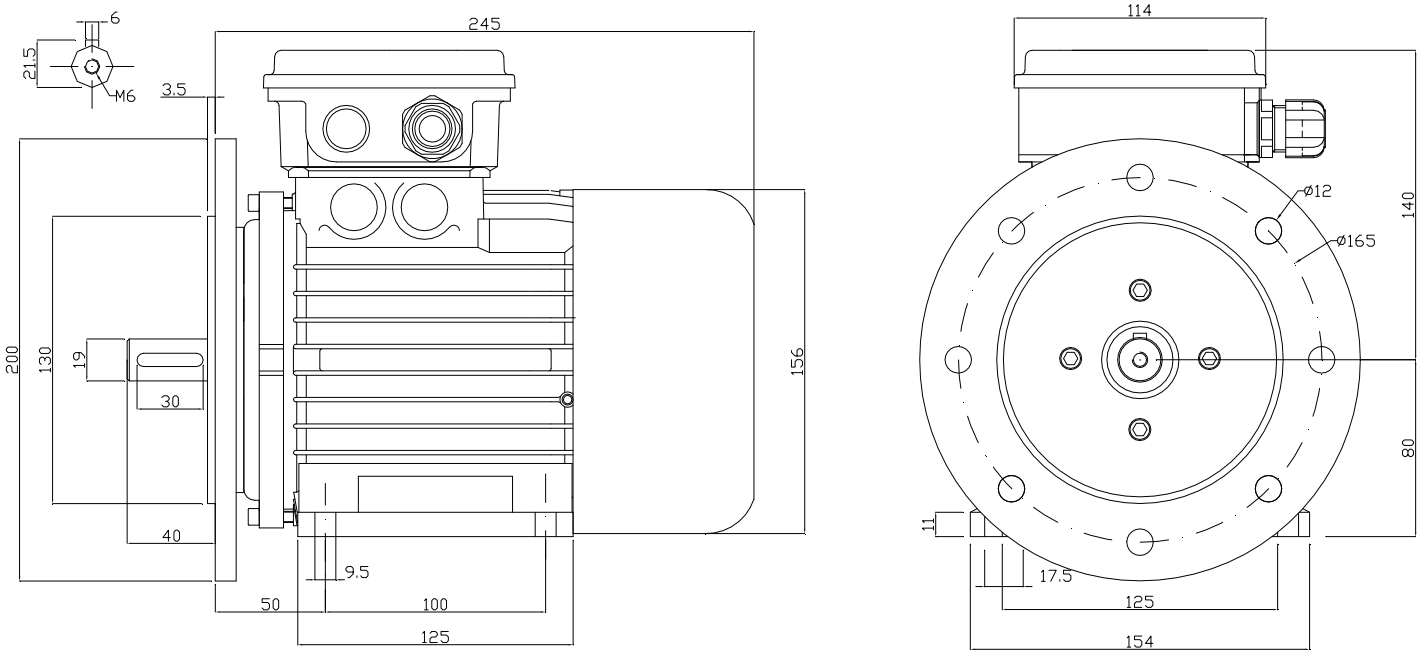

La **ELPROMtech S.r.l.** si riserva a termini di legge la proprietà del documento con divieto di riprodurlo o di renderlo comunque noto a terzi o a ditte concorrenti, senza la sua autorizzazione.