MOTOR SPECIFICATION SHEET

SPECIFIC N°: OE063A2W2305P4U

MOTOR PART NR	OE063A2W2305P4U	CUSTOMER PART NR	-	
DRAWING NR	OE063A2W2305P4U	MOTOR TYPE	OE063A22305P4U	
Type of winding	3 PHASE 1 SPEED			
PROTECTION	II 2G Ex dbe IIC T4 Gb	CERTIFICATE	EPT 17 ATEX 2588X	
IP PROTECTION	IP65	ENVIRONMENT CONDITIONS	-20 /+50°C Max Altitude: 1000m	
POLES	2	NOMINAL POWER kW	0.18 0.22	
Nom. Speed rpm	2825 3390	Voltage-Frequency	230/400V 50Hz 265/460V 60Hz	Tolerance: Voltage ±5%
Nom. Current A	1.07/0.62 1.07/0.62	COS ϕ	0,76 0,76	
Duty	S1 Continuous Duty	Direction of Rotation	BIDIRECTIONAL	
Insulation Class	F	Mounting IM	B34	
IEC Frame Size	63	Material end Shield/Flange	Aluminium	
Material Terminal Box	Aluminium	Material Fan	PLASTIC Nylon V6	
Material Cover Fan	Zinc plated steel	Material shaft	Steel C43	
DE Bearing Type	6202-ZZ	NDE Bearing Type	6202-ZZ	
Position of terminal box	TOP	Cable gland Type	N.2 M20x1,5	
Cable gland position (view from DE)	Right	Thermal protection	PTC130	
Painting	-	Motor Colour	Not painted motor	
Run capacitor μF	-	Start capacitor	-	

In compliance with the EC Directives

2014/34/UE (ATEX)
2014/30/UE (EMC)
2006/42/EC (Machinery)
2011/65/CE (RoHS II)

and comply with the following Standards

EN 60079-0, 1, 7
EN 60034-1,2,5,6,7,9,12,14,
IEC60072-1,
EN 60259

Overall dimensions

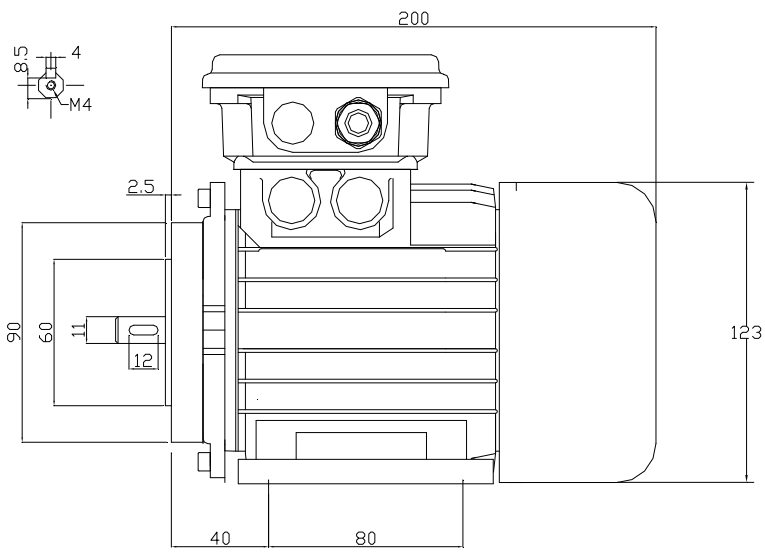

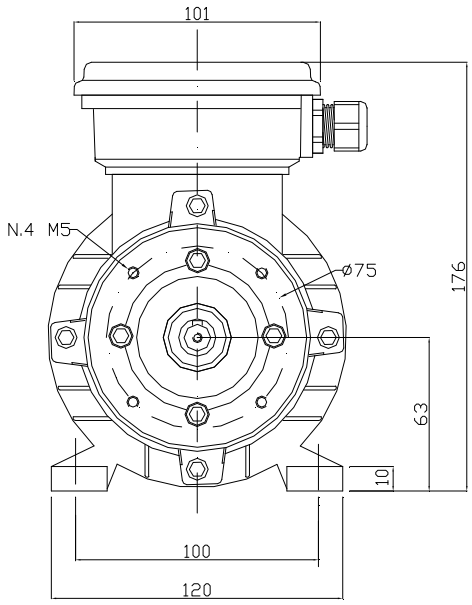

La **ELPROMtech S.r.l.** si riserva a termini di legge la proprietà del documento con divieto di riprodurlo o di renderlo comunque noto a terzi o a ditte concorrenti, senza la sua autorizzazione.