T3AB132SB-2 7,5KW 230/400V B34

Three-phase asynchronous brake motor in aluminum

Motor type	T3AB132SB-2 7,5KW 230/400V B34
Brand	BUSCK
Item number	B3A21335e

Voltage V	Power kW	Frequency Hz	Current A	Speed rpm
230	7,5	50	22,8	2930
400	7,5	50	13,1	2930
460	8,63	60	13,1	3516

Duty	S1	Efficiency class	IE3
Enclosure	IP55	Efficiency, load 100%	90,1
Insulation class	F	Efficiency, load 75%	90,9
Cooling	IC411 (TEFC)	Efficiency, load 50%	90,7
Max. ambient temp.	40°C	Power fact, load 100%	0,92
Min. ambient temp.	-20°C		
Max. temp. rise	80 K	Painting	Standard
Max altitude, masl	1000	Color	RAL 9005
		Weight kg	63,35
Torque, Nm	24,45	Sound pressure Lp dB(A)	80
Starting torque ratio	2,6	Bearing DE	6308-2Z/C3
Pull up torque ratio	1,9	Bearing NDE	6208-2Z/C3
Pull out torque ratio	3,6	Balance grade	Normal
Starting current ratio	10,1	Inertia kgm2	0,01899607
This motor has DNV type approval		Cable entries	2xM25, 1xM16
		Brake torque, Nm	60
Note	Brake motor IE3		

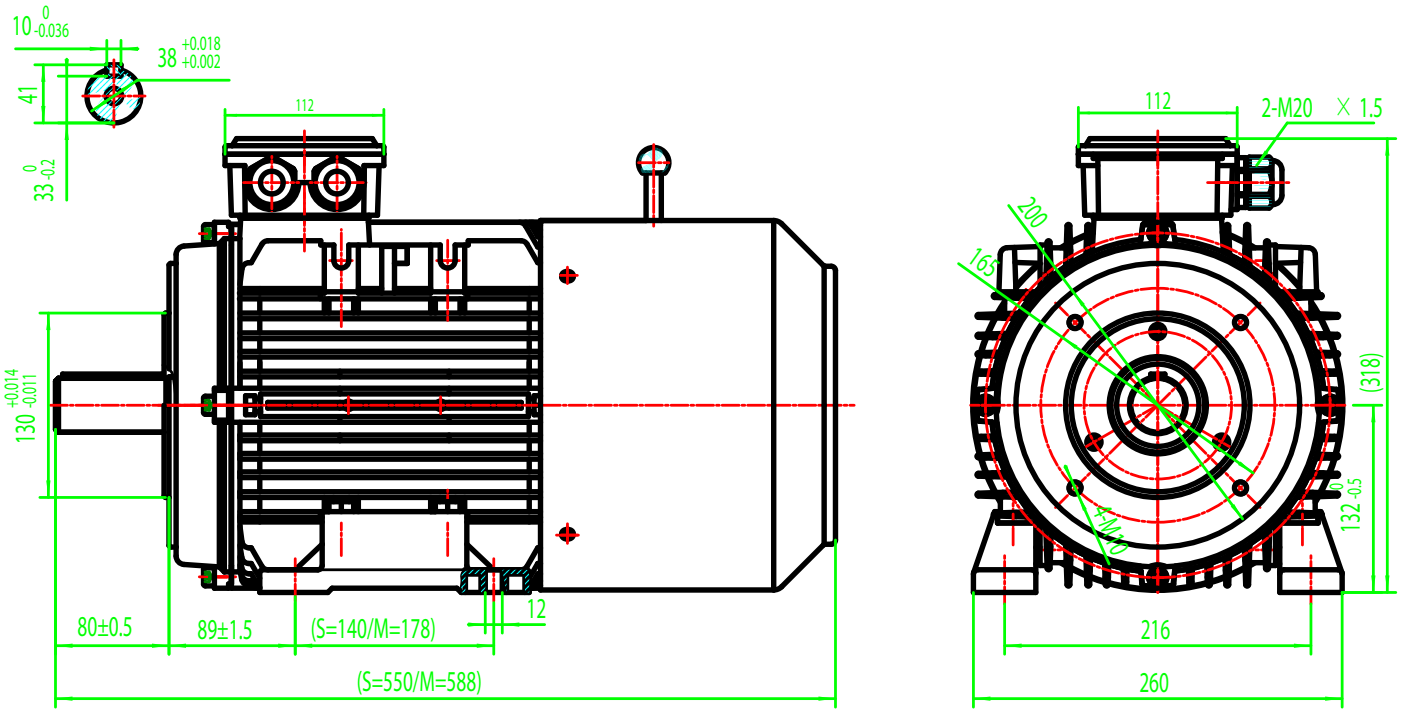

BUSCK
www.busck.eu

Busck & Co AB
Gamla Riksvägen 14
428 32 Göteborg
Sweden
556027-1990
info@busck.se

Busck & Co ApS
Postboks 108
0900 København C
Denmark
info@busck.eu

Busck AS
Skibåsen 35C
4636 Kristiansand
Norway
info@busck.no