MSBCCL71B-8 0,12KW 230/400V B5

Three-phase asynchronous brake motor in aluminum

Motor type	MSBCCL71B-8 0,12KW 230/400V B5
Brand	BUSCK
Item number	B3080722

Voltage V	Power kW	Frequency Hz	Current A	Speed rpm
230	0,12	50	1,01	690
400	0,12	50	0,58	690
460	0,14	60	0,58	828

Duty	S1	Efficiency class	EFF2
Enclosure	IP55	Efficiency, load 100%	51
Insulation class	F	Power fact, load 100%	0,59
Cooling	IC411 (TEFC)		
Max. ambient temp.	40°C	Painting	Standard
Min. ambient temp.	-20°C	Color	RAL 9005
Max. temp. rise	80 K	Weight kg	0
Max altitude, masl	1000	Sound pressure Lp dB(A)	50
		Bearing DE	6202-2Z/C3
Starting torque ratio	1,7	Bearing NDE	6202-2Z/C3
Pull up torque ratio	1,3	Balance grade	Normal
Pull out torque ratio	2,7	Cable entries	1xM20
		Brake torque, Nm	4

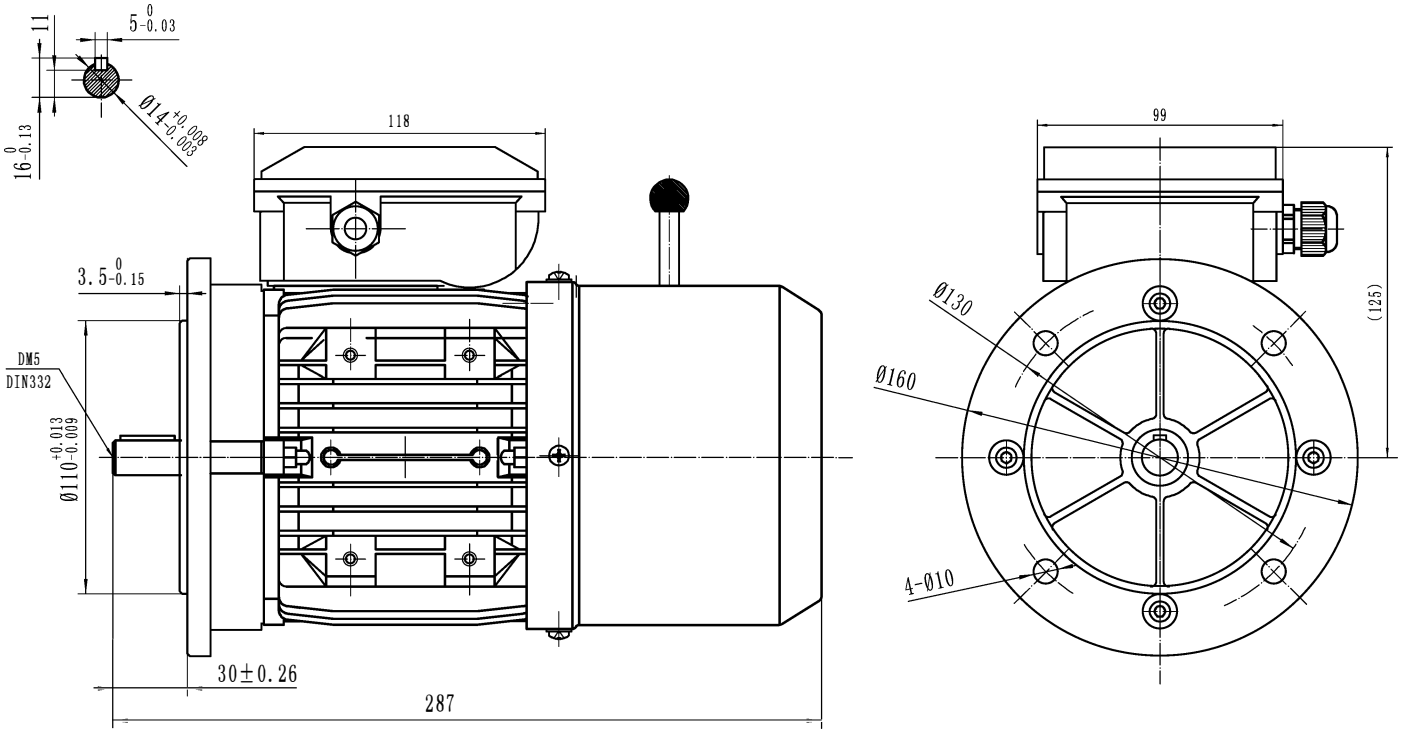

BUSCK
www.busck.eu

Busck & Co AB
Gamla Riksvägen 14
428 32 Göteborg
Sweden
556027-1990
info@busck.se

Busck & Co ApS
Postboks 108
0900 København C
Denmark
info@busck.eu

Busck AS
Skibåsen 35C
4636 Kristiansand
Norway
info@busck.no