MSBCCL71A-8 0,09KW 230/400V B5

Three-phase asynchronous brake motor in aluminum

Motor type	MSBCCL71A-8 0,09KW 230/400V B5
Brand	BUSCK
Item number	B3080712

Voltage V	Power kW	Frequency Hz	Current A	Speed rpm
230	0,09	50		680
400	0,09	50		680
460	0,10	60		816

Duty	S1
Enclosure	IP55
Insulation class	F
Cooling	IC411 (TEFC)
Max. ambient temp.	40°C
Min. ambient temp.	-20°C
Max. temp. rise	80 K
Max altitude, masl	1000
Starting torque ratio	1,5
Pull up torque ratio	1,3
Pull out torque ratio	1,7

Efficiency class	EFF2
Efficiency, load 100%	48
Painting	Standard
Color	RAL 9005
Weight kg	0
Sound pressure Lp dB(A)	50
Bearing DE	6202-2Z/C3
Bearing NDE	6202-2Z/C3
Balance grade	Normal
Cable entries	1xM20
Brake torque, Nm	4

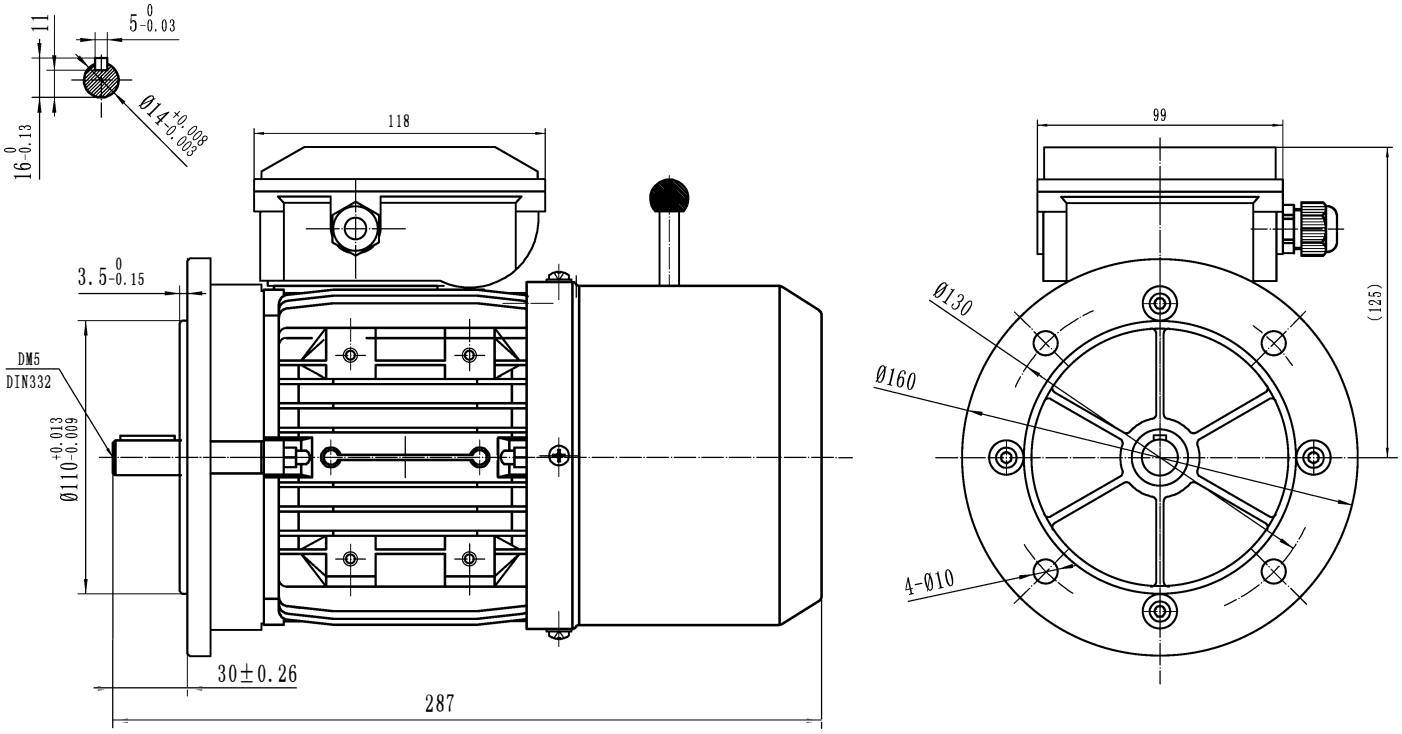

BUSCK
www.busck.eu

Busck & Co AB
Gamla Riksvägen 14
428 32 Göteborg
Sweden
556027-1990
info@busck.se

Busck & Co ApS
Postboks 108
0900 København C
Denmark
info@busck.eu

Busck AS
Skibåsen 35C
4636 Kristiansand
Norway
info@busck.no