MSBCCL100L-6 1,5KW 230/400V B5

Three-phase asynchronous brake motor in aluminum

Motor type	MSBCCL100L-6 1,5KW 230/400V B5
Brand	BUSCK
Item number	B3061002

Voltage V	Power kW	Frequency Hz	Current A	Speed rpm
230	1,5	50	6,7	945
400	1,5	50	3,85	945
460	1,73	60	3,85	1134

Duty	S1	Efficiency class	EFF2
Enclosure	IP55	Efficiency, load 100%	72
Insulation class	F	Power fact, load 100%	0,74
Cooling	IC411 (TEFC)		
Max. ambient temp.	40°C	Painting	Standard
Min. ambient temp.	-20°C	Color	RAL 9005
Max. temp. rise	80 K	Weight kg	23
Max altitude, masl	1000	Sound pressure Lp dB(A)	61
		Bearing DE	62062Z/C3
Torque, Nm	15	Bearing NDE	62062Z/C3
Starting torque ratio	2,1	Balance grade	Normal
Pull up torque ratio	2,1	Cable entries	1xM20
Pull out torque ratio	2,6		

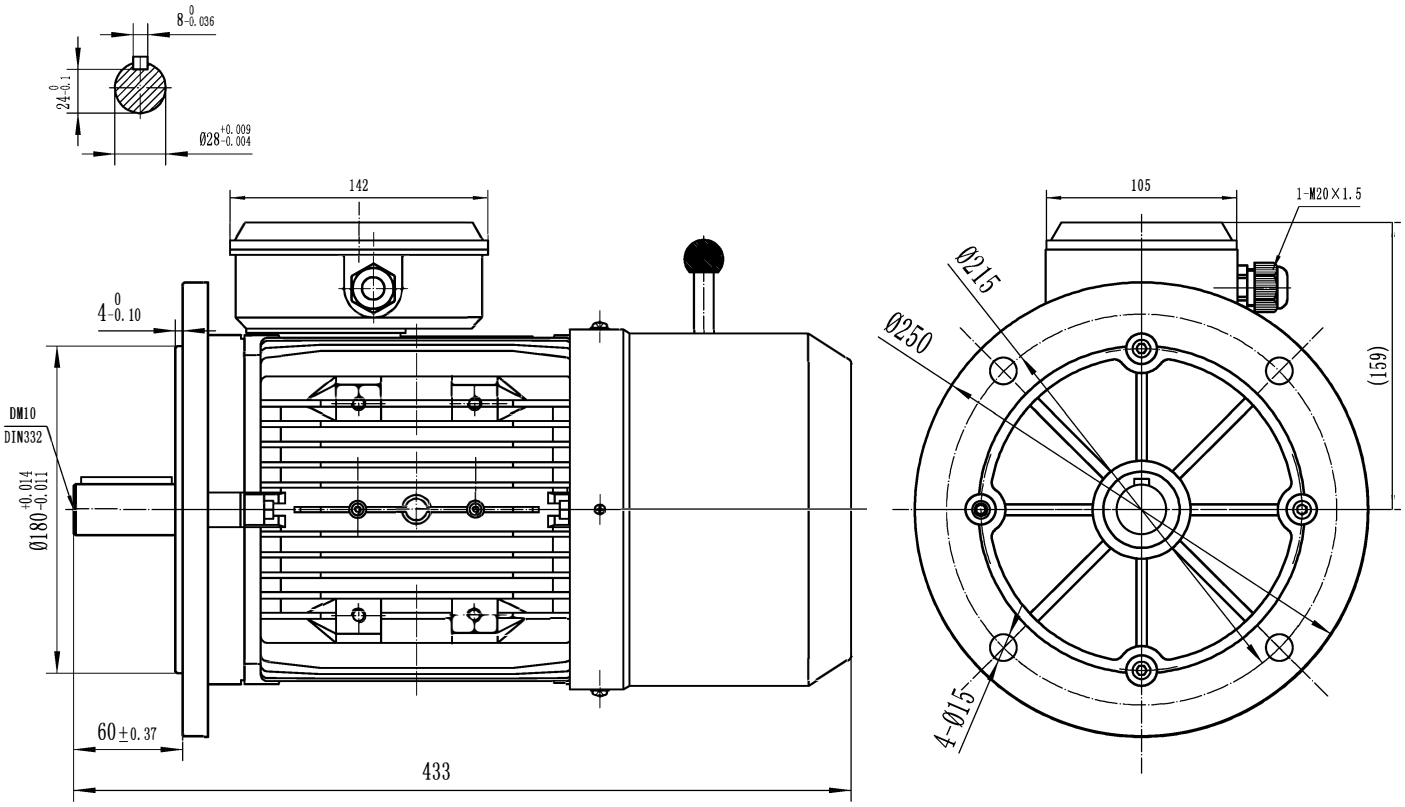

BUSCK
www.busck.eu

Busck & Co AB
Gamla Riksvägen 14
428 32 Göteborg
Sweden
556027-1990
info@busck.se

Busck & Co ApS
Postboks 108
0900 København C
Denmark
info@busck.eu

Busck AS
Skibåsen 35C
4636 Kristiansand
Norway
info@busck.no