T3AB90L-6 1,1KW 230/400V B35

Three-phase asynchronous brake motor in aluminum

Motor type	T3AB90L-6 1,1KW 230/400V B35
Brand	BUSCK
Item number	B3060914e

Voltage V	Power kW	Frequency Hz	Current A	Speed rpm
230	1,1	50	5,04	950
400	1,1	50	2,9	950
460	1,27	60	2,9	1140

Duty	S1
Enclosure	IP55
Insulation class	F
Cooling	IC411 (TEFC)
Max. ambient temp.	40°C
Min. ambient temp.	-20°C
Max. temp. rise	80 K
Max altitude, masl	1000
Torque, Nm	11,06
Starting torque ratio	2,7
Pull up torque ratio	2,5
Pull out torque ratio	2,9
Starting current ratio	5,2
Note	Brake motor IE3

Efficiency class	IE3
Efficiency, load 100%	81
Efficiency, load 75%	81,1
Efficiency, load 50%	78,4
Power fact, load 100%	0,67
Painting	Standard
Color	RAL 9005
Weight kg	19,58
Sound pressure Lp dB(A)	59
Bearing DE	6205-2Z/C3
Bearing NDE	6205-2Z/C3
Balance grade	Normal
Inertia kgm2	0,005487386
Cable entries	1xM20
Brake torque, Nm	23

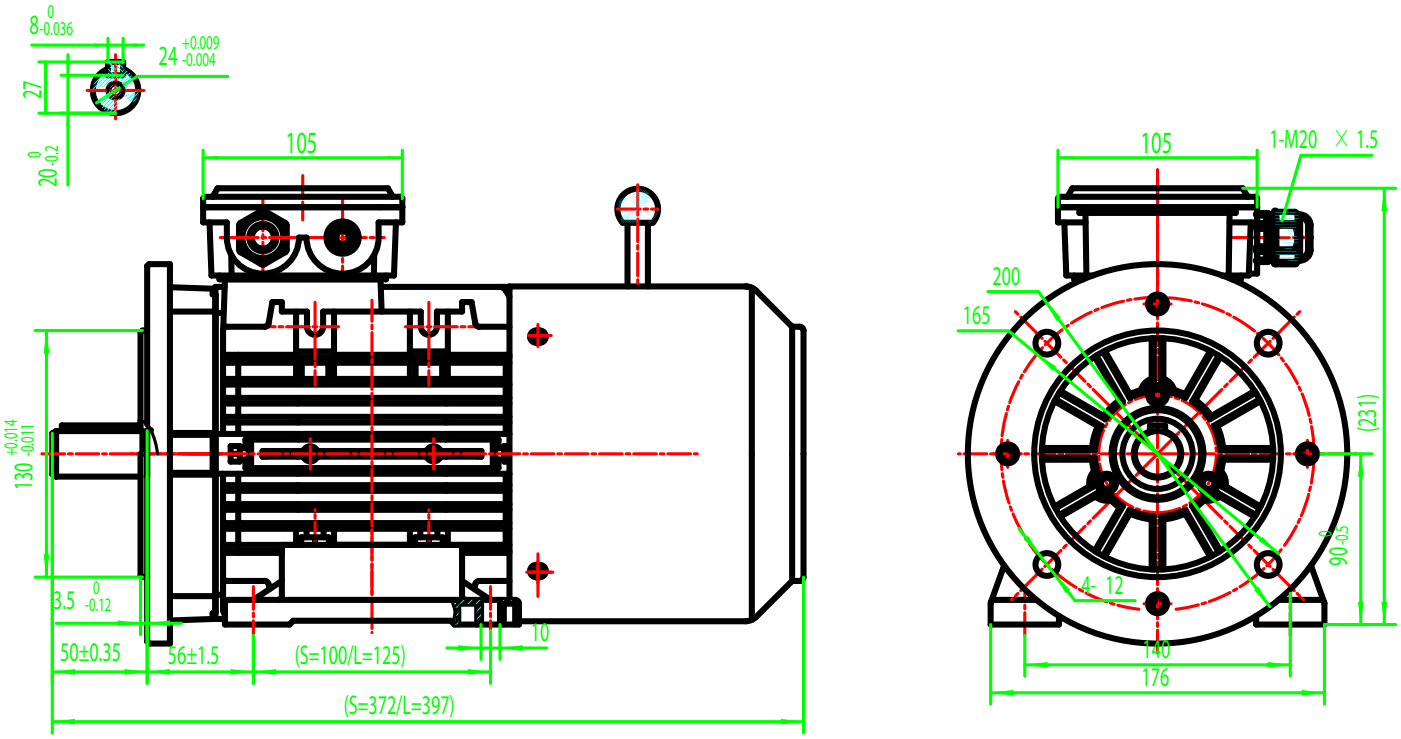

BUSCK
www.busck.eu

Busck & Co AB
Gamla Riksvägen 14
428 32 Göteborg
Sweden
556027-1990
info@busck.se

Busck & Co ApS
Postboks 108
0900 København C
Denmark
info@busck.eu

Busck AS
Skibåsen 35C
4636 Kristiansand
Norway
info@busck.no