MSBCCL90L-6 1,1KW 230/400V B3

Three-phase asynchronous brake motor in aluminum

Motor type	MSBCCL90L-6 1,1KW 230/400V B3
Brand	BUSCK
Item number	B3060911

Voltage V	Power kW	Frequency Hz	Current A	Speed rpm
230	1,1	50	5,23	910
400	1,1	50	3,01	910
460	1,27	60	3,01	1092

Duty	S1
Enclosure	IP55
Insulation class	F
Cooling	IC411 (TEFC)
Max. ambient temp.	40°C
Min. ambient temp.	-20°C
Max. temp. rise	80 K
Max altitude, masl	1000
Torque, Nm	11,4
Starting torque ratio	2,2
Pull up torque ratio	1,3
Pull out torque ratio	2,2
Starting current ratio	5,5

Efficiency class	EFF2
Efficiency, load 100%	72
Power fact, load 100%	0,72
Painting	Standard
Color	RAL 9005
Weight kg	20
Sound pressure Lp dB(A)	59
Bearing DE	6205-2Z/C3
Bearing NDE	6205-2Z/C3
Balance grade	Normal
Cable entries	1xM20
Brake torque, Nm	20

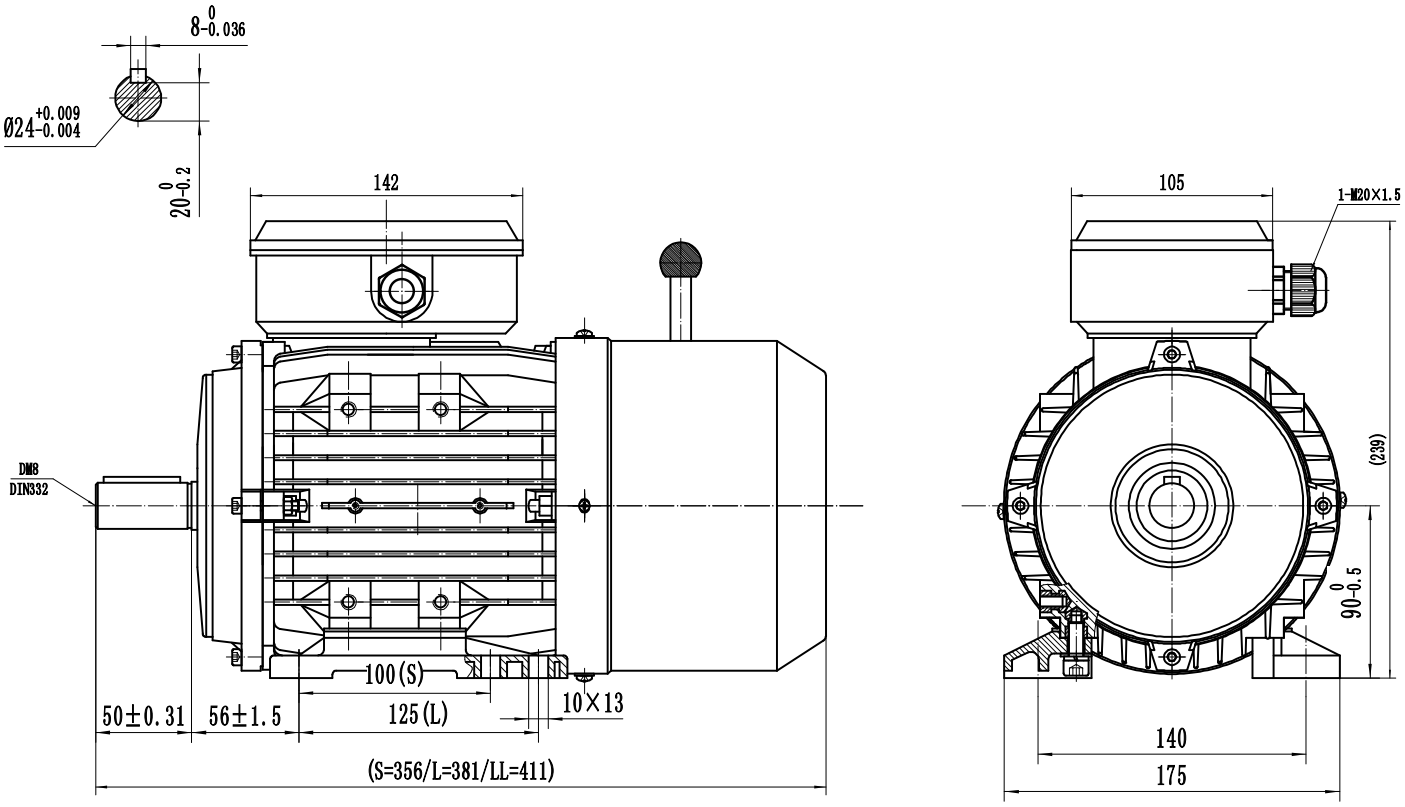

BUSCK
www.busck.eu

Busck & Co AB
Gamla Riksvägen 14
428 32 Göteborg
Sweden
556027-1990
info@busck.se

Busck & Co ApS
Postboks 108
0900 København C
Denmark
info@busck.eu

Busck AS
Skibåsen 35C
4636 Kristiansand
Norway
info@busck.no