MSBCCL80B-6 0,55KW 230/400V B14

Three-phase asynchronous brake motor in aluminum

Motor type	MSBCCL80B-6 0,55KW 230/400V B14
Brand	BUSCK
Item number	B3060813

Voltage V	Power kW	Frequency Hz	Current A	Speed rpm
230	0,55	50	2,87	900
400	0,55	50	1,65	900
460	0,63	60	1,65	1080

Duty	S1
Enclosure	IP55
Insulation class	F
Cooling	IC411 (TEFC)
Max. ambient temp.	40°C
Min. ambient temp.	-20°C
Max. temp. rise	80 K
Max altitude, masl	1000
Torque, Nm	5,8
Starting torque ratio	2,0
Pull up torque ratio	1,5
Pull out torque ratio	2,3
Starting current ratio	4,0

Efficiency class	EFF2
Efficiency, load 100%	67
Power fact, load 100%	0,72
Painting	Standard
Color	RAL 9005
Weight kg	12
Sound pressure Lp dB(A)	56
Bearing DE	6204-2Z/C3
Bearing NDE	6204-2Z/C3
Balance grade	Normal
Cable entries	1xM20
Brake torque, Nm	16

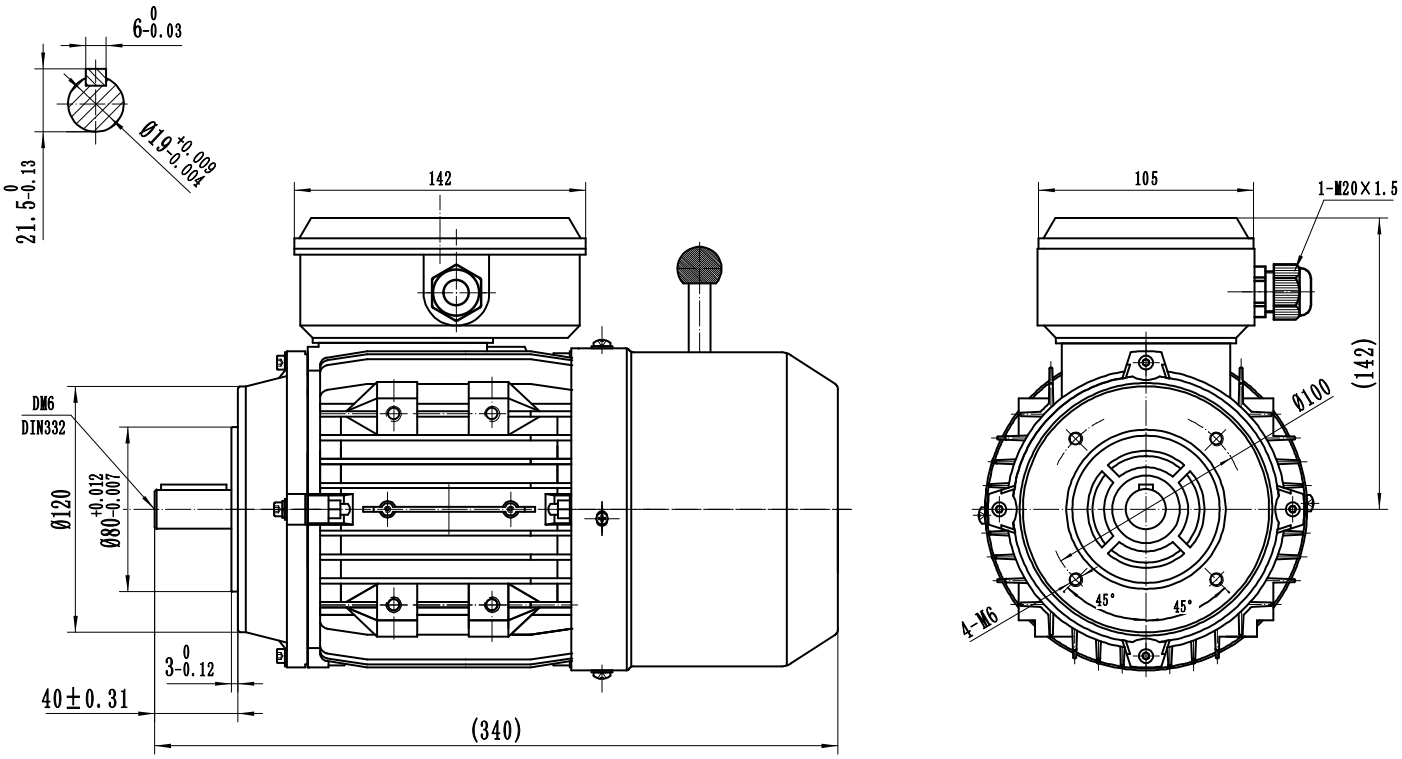

BUSCK
www.busck.eu

Busck & Co AB
Gamla Riksvägen 14
428 32 Göteborg
Sweden
556027-1990
info@busck.se

Busck & Co ApS
Postboks 108
0900 København C
Denmark
info@busck.eu

Busck AS
Skibåsen 35C
4636 Kristiansand
Norway
info@busck.no