T2AB71A-6 0,18KW 230/400V B5

Three-phase asynchronous brake motor in aluminum

Motor type	T2AB71A-6 0,18KW 230/400V B5
Brand	BUSCK
Item number	B3060712e

Voltage V	Power kW	Frequency Hz	Current A	Speed rpm
230	0,18	50	1,2	850
400	0,18	50	0,69	850
460	0,21	60	0,69	1020

Duty	S1
Enclosure	IP55
Insulation class	F
Cooling	IC411 (TEFC)
Max. ambient temp.	40°C
Min. ambient temp.	-20°C
Max. temp. rise	80 K
Max altitude, masl	1000
Starting torque ratio	1,9
Pull up torque ratio	1,8
Pull out torque ratio	2,2
Starting current ratio	3,1
Note	Brake motor IE2

Efficiency class	IE2
Efficiency, load 100%	56,6
Efficiency, load 75%	54,4
Efficiency, load 50%	46,3
Power fact, load 100%	0,67
Painting	Standard
Color	RAL 9005
Weight kg	6,18
Sound pressure Lp dB(A)	52
Bearing DE	6202 2RZ C3
Bearing NDE	6202 2RZ C3
Balance grade	Normal
Inertia kgm2	0,000713
Brake torque, Nm	4

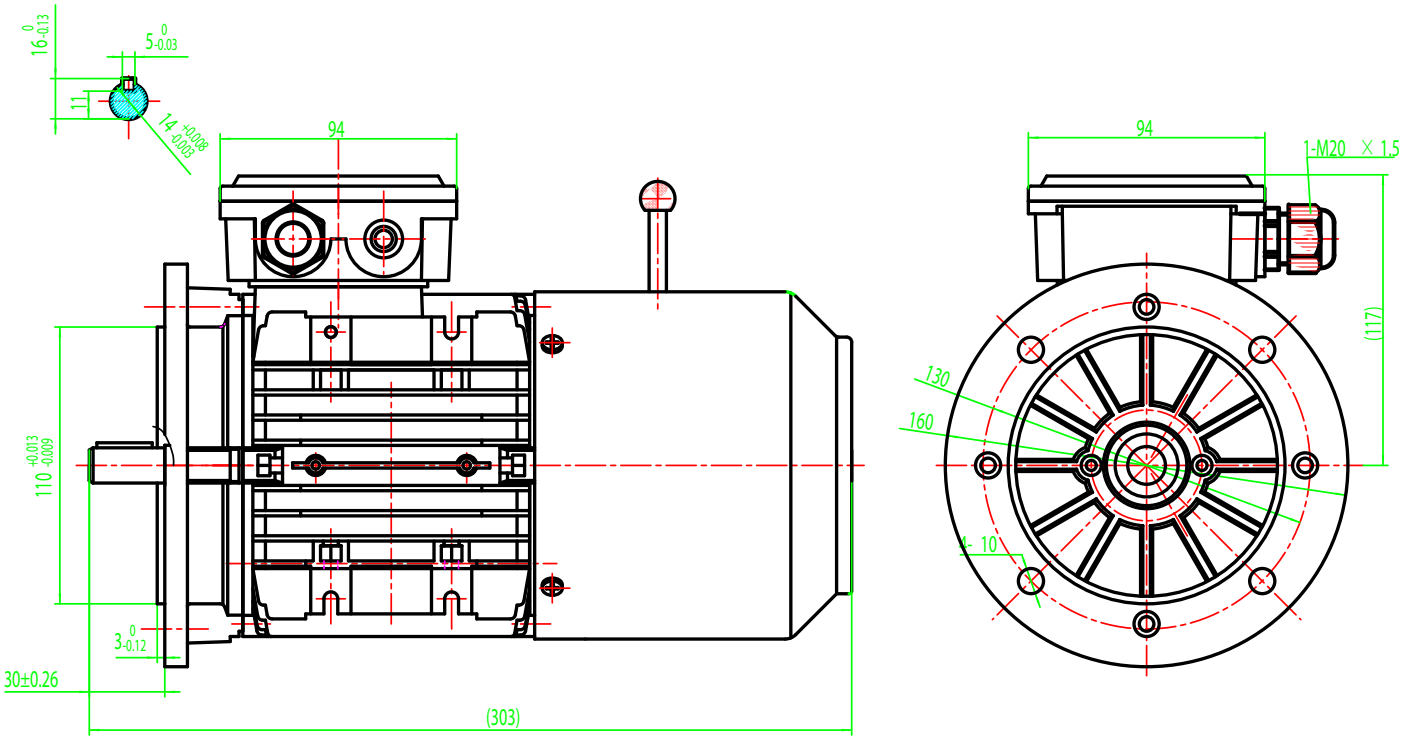

BUSCK
www.busck.eu

Busck & Co AB
Gamla Riksvägen 14
428 32 Göteborg
Sweden
556027-1990
info@busck.se

Busck & Co ApS
Postboks 108
0900 København C
Denmark
info@busck.eu

Busck AS
Skibåsen 35C
4636 Kristiansand
Norway
info@busck.no