# MSBCCL100LA-4 2,2KW 230/400V  B35

## Three-phase asynchronous brake motor in aluminum

| | |
|---|---|
| Motor type | MSBCCL100LA-4 2,2KW 230/400V  B35 |
| Brand | BUSCK |
| Item number | B3041004 |

| Voltage V | Power kW | Frequency Hz | Current A | Speed rpm |
|---|---|---|---|---|
| 230 | 2,2 | 50 | 8,42 | 1420 |
| 400 | 2,2 | 50 | 4,84 | 1420 |
| 460 | 2,53 | 60 | 4,84 | 1704 |

| | |
|---|---|
| Duty | S1 |
| Enclosure | IP55 |
| Insulation class | F |
| Cooling | IC411 (TEFC) |
| Max. ambient temp. | 40°C |
| Min. ambient temp. | -20°C |
| Max. temp. rise | 80 K |
| Max altitude, masl | 1000 |
| Torque, Nm | 14,8 |
| Starting torque ratio | 2,2 |
| Pull up torque ratio | 1,5 |
| Pull out torque ratio | 2,3 |
| Starting current ratio | 7 |

| | |
|---|---|
| Efficiency class | EFF2 |
| Efficiency, load 100% | 81 |
| Power fact, load 100% | 0,81 |
| Painting | Standard |
| Color | RAL 9005 |
| Weight kg | 25 |
| Sound pressure Lp dB(A) | 64 |
| Bearing DE | 6206-2Z/C3 |
| Bearing NDE | 6206-2Z/C3 |
| Balance grade | Normal |
| Inertia kgm2 | 0,0058 |
| Cable entries | 1xM20 |
| Brake torque, Nm | 32 |

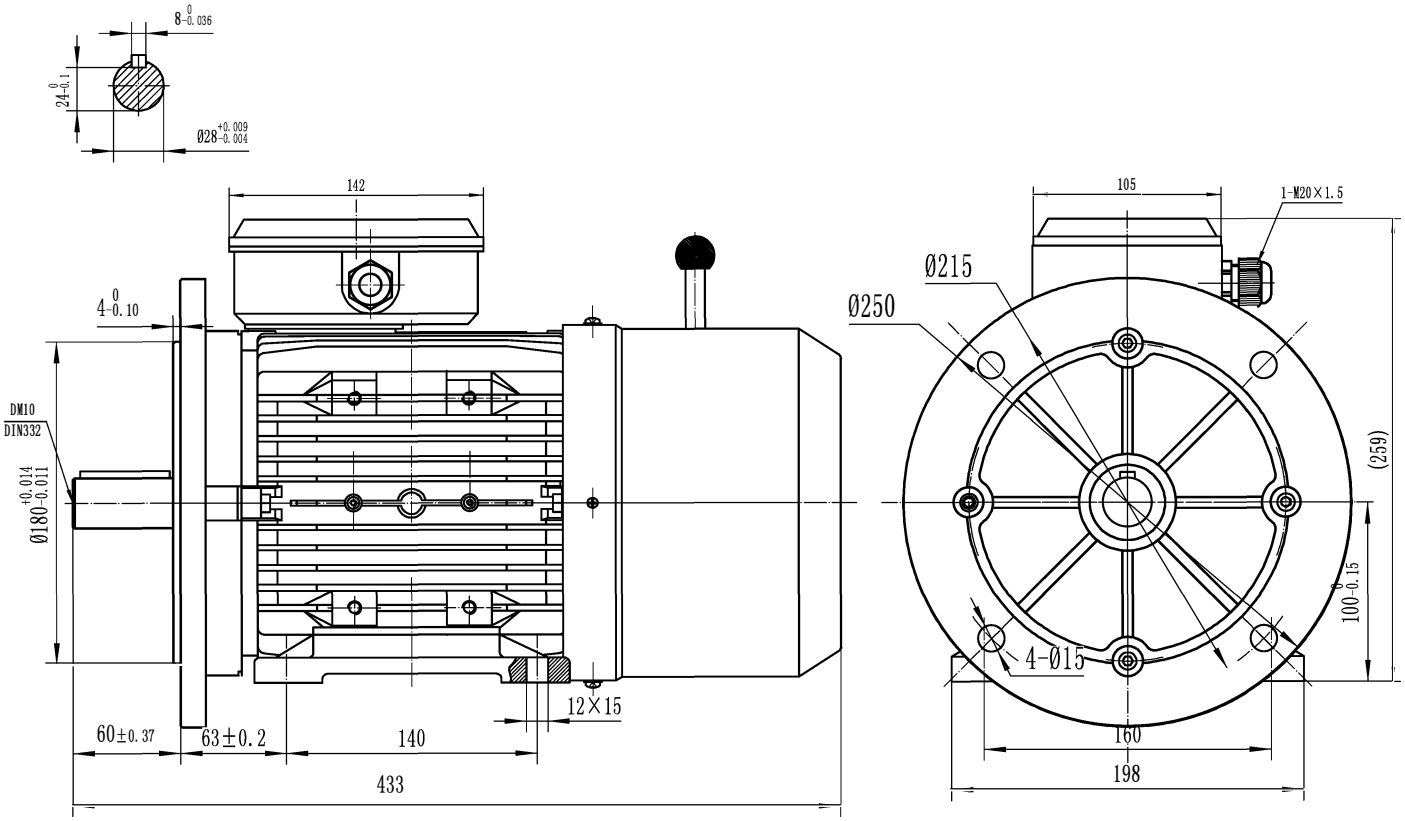



BUSCK
www.busck.eu

Busck & Co AB
Gamla Riksvägen 14
428 32 Göteborg
Sweden
556027-1990
info@busck.se

Busck &  Co ApS
Postboks 108
0900 København C
Denmark
info@busck.eu

Busck AS
Skibåsen 35C
4636 Kristiansand
Norway
info@busck.no