T3AB71B-4 0,37KW 230/400V B14

Three-phase asynchronous brake motor in aluminum

Motor type	T3AB71B-4 0,37KW 230/400V B14
Brand	BUSCK
Item number	B3040723e3

Voltage V	Power kW	Frequency Hz	Current A	Speed rpm
230	0,37	50	1,77	1420
400	0,37	50	1,02	1420
460	0,43	60	1,02	1704

Duty	S1	Efficiency class	IE3
Enclosure	IP55	Efficiency, load 100%	77,3
Insulation class	F	Efficiency, load 75%	77,1
Cooling	IC411 (TEFC)	Efficiency, load 50%	73,6
Max. ambient temp.	40°C	Power fact, load 100%	0,68
Min. ambient temp.	-20°C		
Max. temp. rise	80 K	Painting	Standard
Max altitude, masl	1000	Color	RAL 9005
		Weight kg	8,13
Torque, Nm	2,49	Sound pressure Lp dB(A)	55
Starting torque ratio	2,8	Bearing DE	6204-2Z/C3
Pull up torque ratio	2,5	Bearing NDE	6204-2Z/C3
Pull out torque ratio	3	Balance grade	Normal
Starting current ratio	5,2	Inertia kgm2	0,000965
Note	IE3	Brake torque, Nm	6

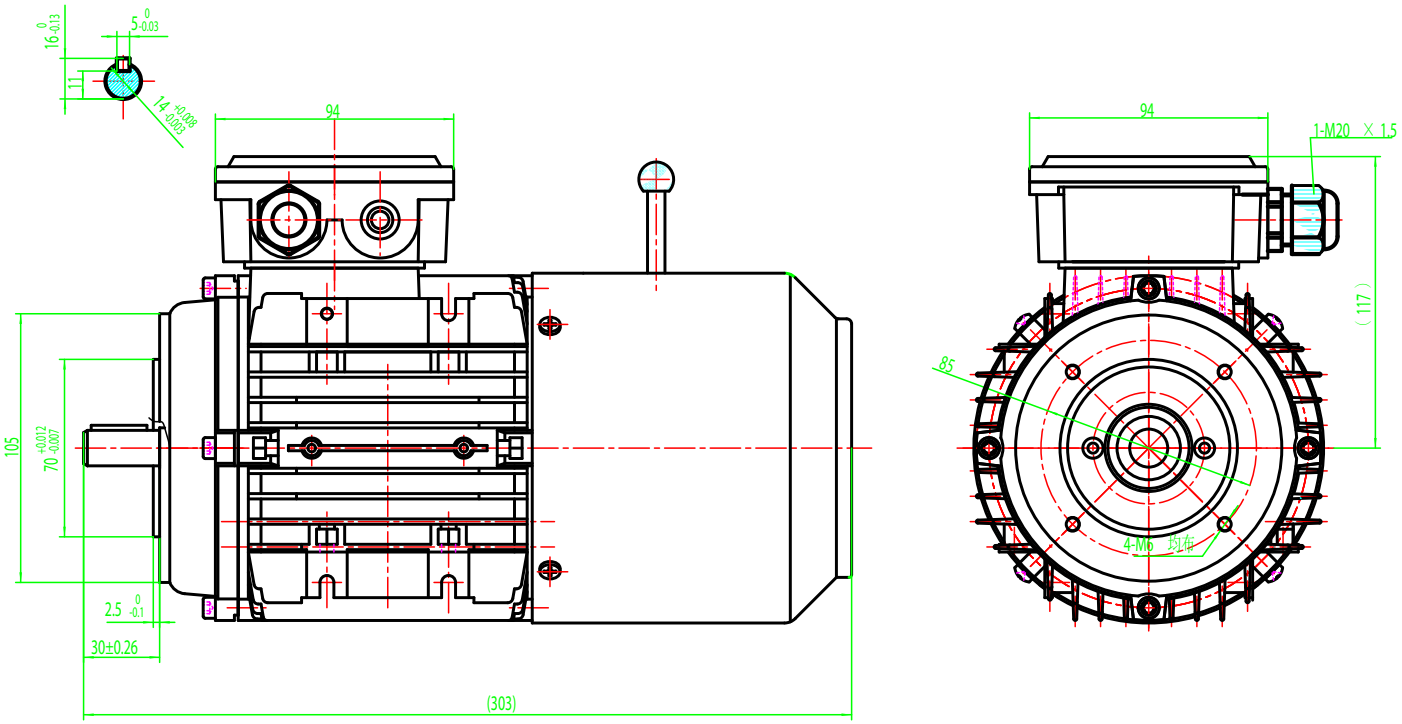

BUSCK
www.busck.eu

Busck & Co AB
Gamla Riksvägen 14
428 32 Göteborg
Sweden
556027-1990
info@busck.se

Busck & Co ApS
Postboks 108
0900 København C
Denmark
info@busck.eu

Busck AS
Skibåsen 35C
4636 Kristiansand
Norway
info@busck.no