MSBCCL71A-4 0,25KW 230/400V B5

Three-phase asynchronous brake motor in aluminum

Motor type	MSBCCL71A-4 0,25KW 230/400V B5
Brand	BUSCK
Item number	B3040712

Voltage V	Power kW	Frequency Hz	Current A	Speed rpm
230	0,25	50	1,46	1350
400	0,25	50	0,84	1350
460	0,29	60	0,84	1620

Duty	S1
Enclosure	IP55
Insulation class	F
Cooling	IC411 (TEFC)
Max. ambient temp.	40°C
Min. ambient temp.	-20°C
Max. temp. rise	80 K
Max altitude, masl	1000
Torque, Nm	1,77
Starting torque ratio	2,2
Pull up torque ratio	1,7
Pull out torque ratio	2,4
Starting current ratio	6

Efficiency class	EFF2
Efficiency, load 100%	60
Power fact, load 100%	0,72
Painting	Standard
Color	RAL 9005
Weight kg	6
Sound pressure Lp dB(A)	55
Bearing DE	6202-2Z/C3
Bearing NDE	6202-2Z/C3
Balance grade	Normal
Inertia kgm2	0,00051
Cable entries	1xM20
Brake torque, Nm	4

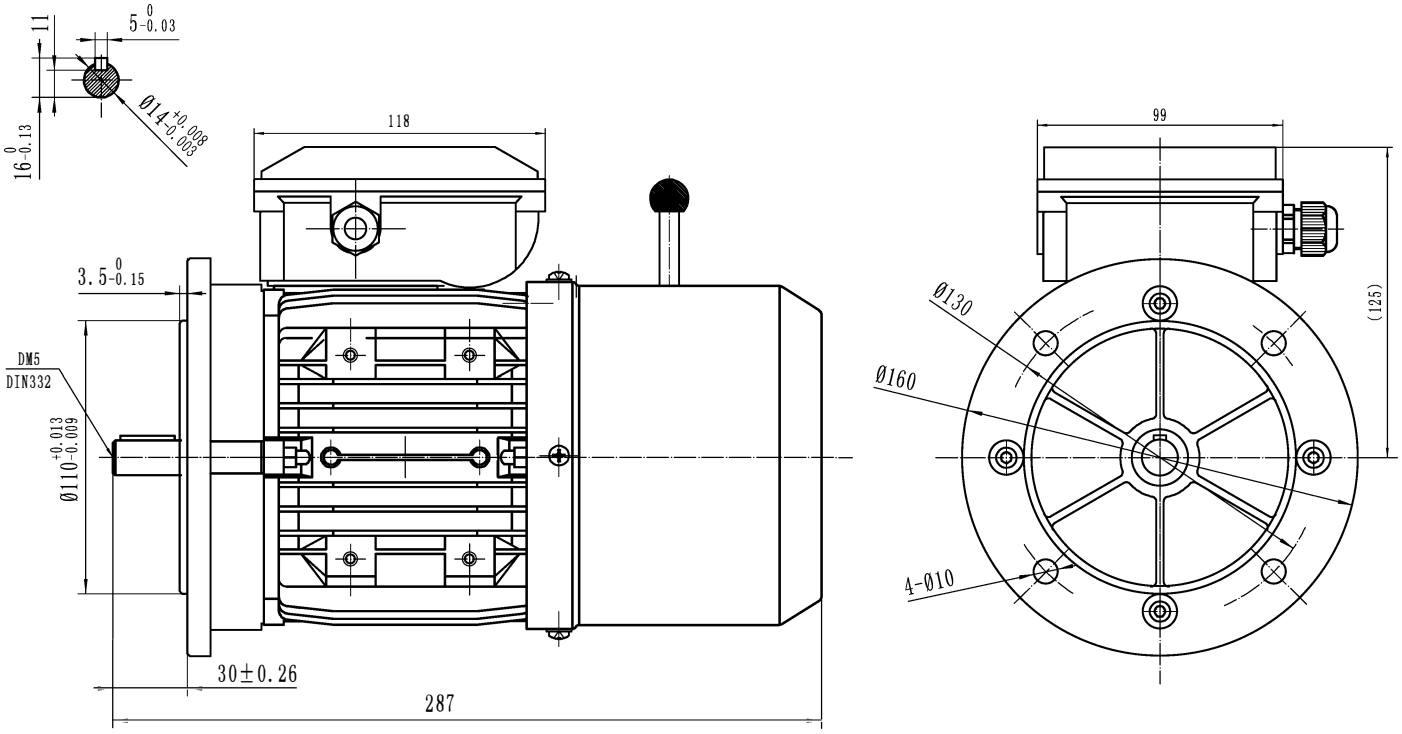

BUSCK
www.busck.eu

Busck & Co AB
Gamla Riksvägen 14
428 32 Göteborg
Sweden
556027-1990
info@busck.se

Busck & Co ApS
Postboks 108
0900 København C
Denmark
info@busck.eu

Busck AS
Skibåsen 35C
4636 Kristiansand
Norway
info@busck.no