T3CR200L-4 30KW 500VD B3

Three-phase asynchronous motor in cast iron

Motor type	T3CR200L-4 30KW 500VD B3
Brand	BUSCK
Item number	93C42001T

Voltage V	Power kW	Frequency Hz	Current A	Speed rpm
500	30	50	45,68	1470
575	34,5	60	45,68	1764

Duty	S1	Efficiency class	IE3
Enclosure	IP55	Efficiency, load 100%	93,6
Insulation class	F	Efficiency, load 75%	93,7
Cooling	IC411 (TEFC)	Efficiency, load 50%	93,2
Max. ambient temp.	45°C	Power fact, load 100%	0,81
Max. temp. rise	80 K		
Max altitude, masl	1000	Painting	Standard
		Color	RAL 9005
Torque, Nm	194,90	Weight kg	250
Starting torque ratio	2,5	Sound pressure Lp dB(A)	79
Pull up torque ratio	1,8	Bearing DE	6312 C3
Pull out torque ratio	2,8	Bearing NDE	6312 C3
Starting current ratio	9	Balance grade	Normal
Winding protection	Thermistors	Inertia kgm2	0,29441
This motor has DNV type approval		Cable entries	2xM50, 1xM16

Note IE3

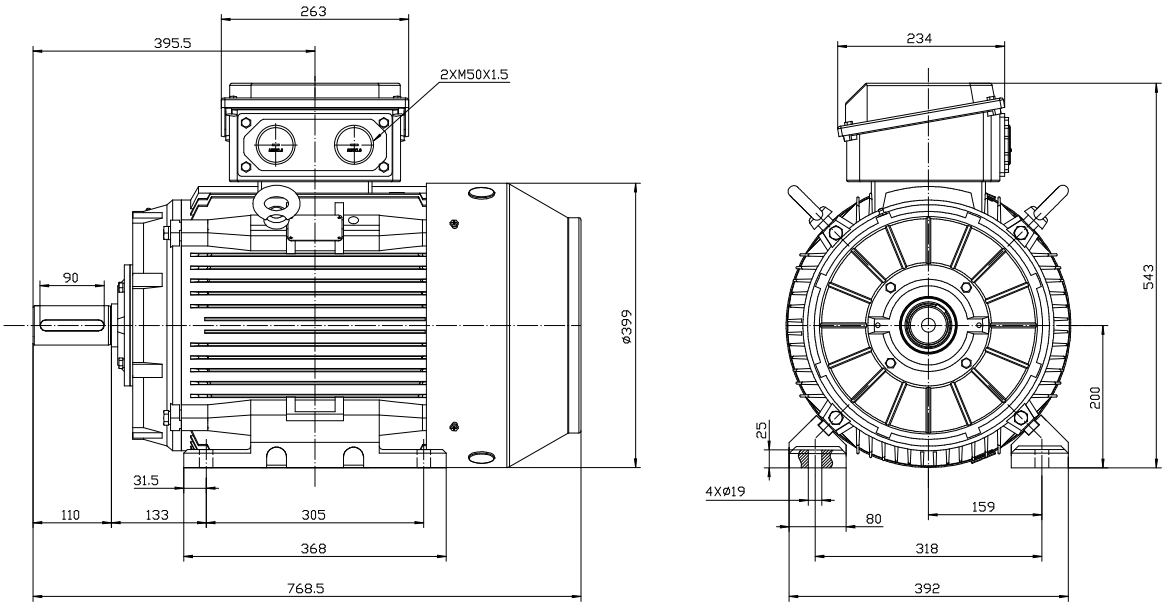

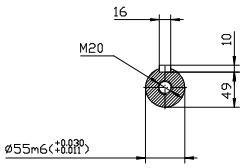

TC 200L B3

BUSCK
www.busck.eu

Busck & Co AB
Gamla Riksvägen 14
428 32 Göteborg
Sweden
556027-1990
info@busck.se

Busck & Co ApS
Postboks 108
0900 København C
Denmark
info@busck.eu

Busck AS
Skibåsen 35C
4636 Kristiansand
Norway
info@busck.no