T3A100LA-2 3KW 500V B35

Three-phase asynchronous motor in aluminum

Motor type	T3A100LA-2 3KW 500V B35
Brand	BUSCK
Item number	93C21004

Voltage V	Power kW	Frequency Hz	Current A	Speed rpm
500	3	50	4,5	2917
575	3,45	60	4,5	3500

Duty	S1	Efficiency class	IE3
Enclosure	IP55	Efficiency, load 100%	87,4
Insulation class	F	Efficiency, load 75%	87,9
Cooling	IC411 (TEFC)	Efficiency, load 50%	86,8
Max. ambient temp.	45°C	Power fact, load 100%	0,89
Min. ambient temp.	-20°C		
Max. temp. rise	80 K	Painting	Standard
Max altitude, masl	1000	Color	RAL 9005
		Weight kg	23,7
Torque, Nm	9,8	Sound pressure Lp dB(A)	76
Starting torque ratio	3,2	Bearing DE	6206-2Z/C3
Pull up torque ratio	2,6	Bearing NDE	6206-2Z/C3
Pull out torque ratio	3,6	Balance grade	Normal
Starting current ratio	9,3	Inertia kgm2	0,0047
Winding protection	Thermocontacts	Cable entries	1xM20, 1xM16

This motor has DNV type approval

Note IE3, Termokontakter

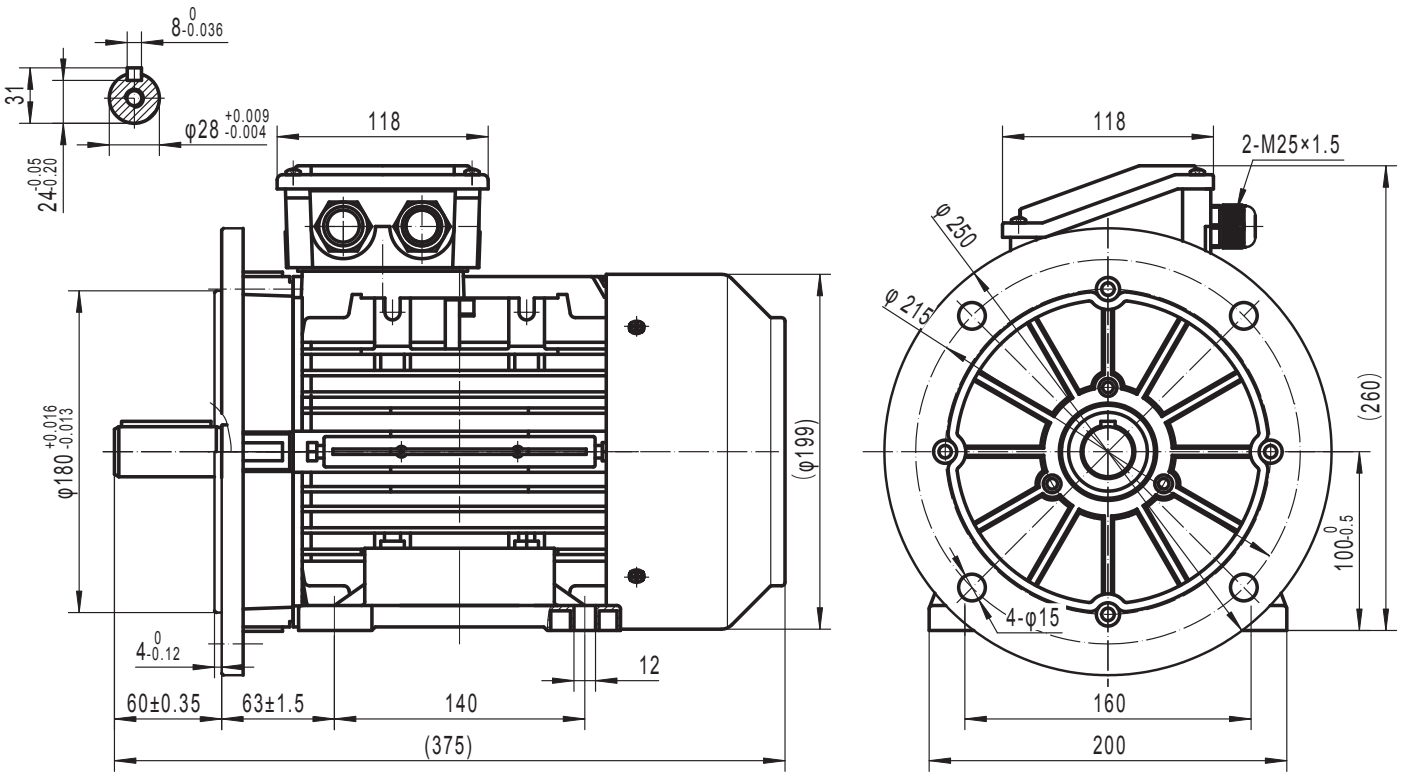

BUSCK
www.busck.eu

Busck & Co AB
Gamla Riksvägen 14
428 32 Göteborg
Sweden
556027-1990
info@busck.se

Busck & Co ApS
Postboks 108
0900 København C
Denmark
info@busck.eu

Busck AS
Skibåsen 35C
4636 Kristiansand
Norway
info@busck.no