SWE315LA-4 160KW 230/400V B35

Three-phase asynchronous motor in cast iron

Motor type	SWE315LA-4 160KW 230/400V B35
Brand	BUSCK
Item number	93A43174

Voltage V	Power kW	Frequency Hz	Current A	Speed rpm
230	160	50	480,0	1490
400	160	50	276,0	1490
460	184	60	276,0	1788

Duty	S1	Efficiency class	IE3
Enclosure	IP55	Efficiency, load 100%	96,1
Insulation class	F	Efficiency, load 75%	96
Cooling	IC411 (TEFC)	Efficiency, load 50%	95
Max. ambient temp.	40°C	Power fact, load 100%	0,87
Min. ambient temp.	-20°C		
Max. temp. rise	80 K	Painting	Standard
Max altitude, masl	1000	Color	RAL 9005
		Weight kg	1090
Torque, Nm	1026	Sound pressure Lp dB(A)	70
Starting torque ratio	2,2	Bearing DE	NU319
Pull out torque ratio	2,3	Bearing NDE	6319
Starting current ratio	7,2	Balance grade	Normal
Winding protection	Thermistors	Inertia kgm2	7,561
		Cable entries	2xM63 + 1xM16 (FL21)
Note	IE3, Kopplingslåda med FL21, 2x M63 + 1 x M16 Färg svart		

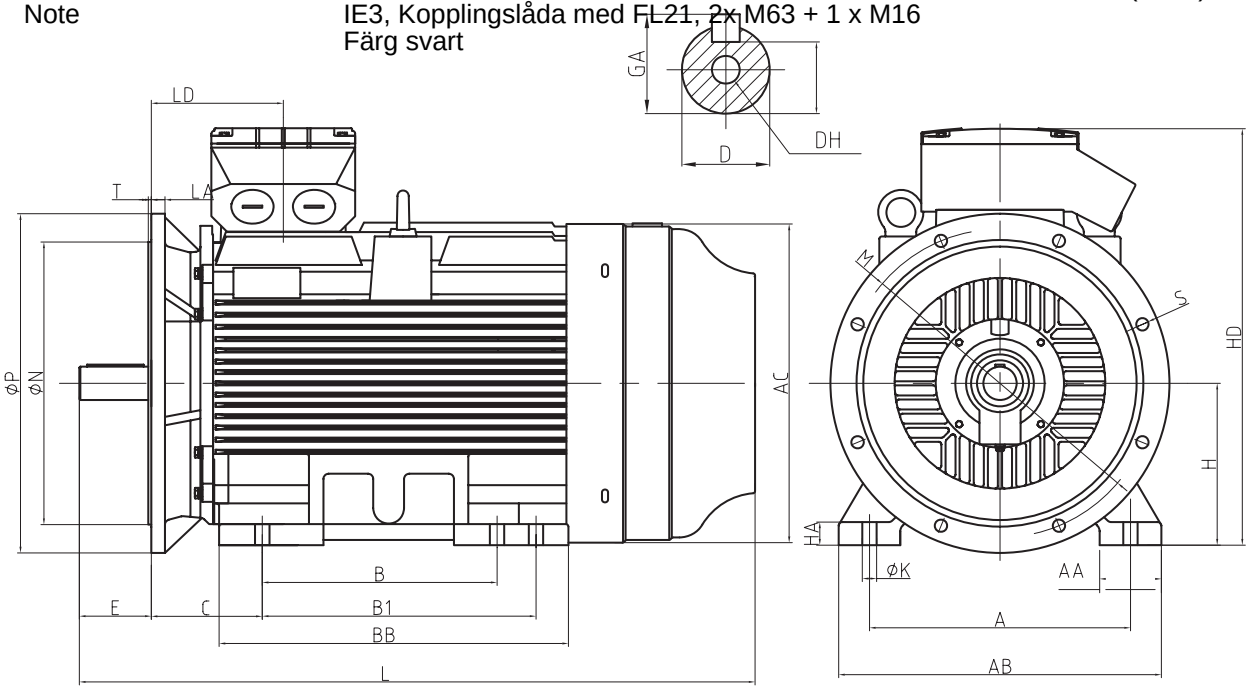

BUSCK
www.busck.eu

Busck & Co AB
Gamla Riksvägen 14
428 32 Göteborg
Sweden
556027-1990
info@busck.se

Busck & Co ApS
Postboks 108
0900 København C
Denmark
info@busck.eu

Busck AS
Skibåsen 35C
4636 Kristiansand
Norway
info@busck.no