# SWE160M-4 11KW 400/690V B3

## Three-phase asynchronous motor in cast iron

| | |
|---|---|
| Motor type | SWE160M-4 11KW 400/690V B3 |
| Brand | BUSCK |
| Item number | 93041601w |

| Voltage V | Power kW | Frequency Hz | Current A | Speed rpm |
|---|---|---|---|---|
| 400 | 11 | 50 | 20,1 | 1460 |
| 690 | 11 | 50 | 11,56 | 1460 |
| 460 | 12,65 | 60 | 20,1 | 1752 |

| | | | |
|---|---|---|---|
| Duty | S1 | Efficiency class | IE3 |
| Enclosure | IP55 | Efficiency, load 100% | 91,7 |
| Insulation class | F | Efficiency, load 75% | 91,8 |
| Cooling | IC411 (TEFC) | Efficiency, load 50% | 90,8 |
| Max. ambient temp. | 40°C | Power fact, load 100% | 0,86 |
| Min. ambient temp. | -20°C | | |
| Max. temp. rise | 80 K | Painting | Standard |
| Max altitude, masl | 1000 | Color | RAL 9005 |
| | | Weight kg | 125 |
| Torque, Nm | 72 | Sound pressure Lp dB(A) | 60 |
| Starting torque ratio | 2,3 | Bearing DE | 6209-2Z/C3 |
| Pull out torque ratio | 2,6 | Bearing NDE | 6209-2Z/C3 |
| Starting current ratio | 7,1 | Balance grade | Normal |
| Winding protection | Thermistors | Inertia kgm2 | 0,1076 |
| | | Cable entries | 2xM32 + 1xM16 (FL13) |
| Note | IE3, Kopplingslåda med FL13, 2 x M40 + 1 x M16 | | |

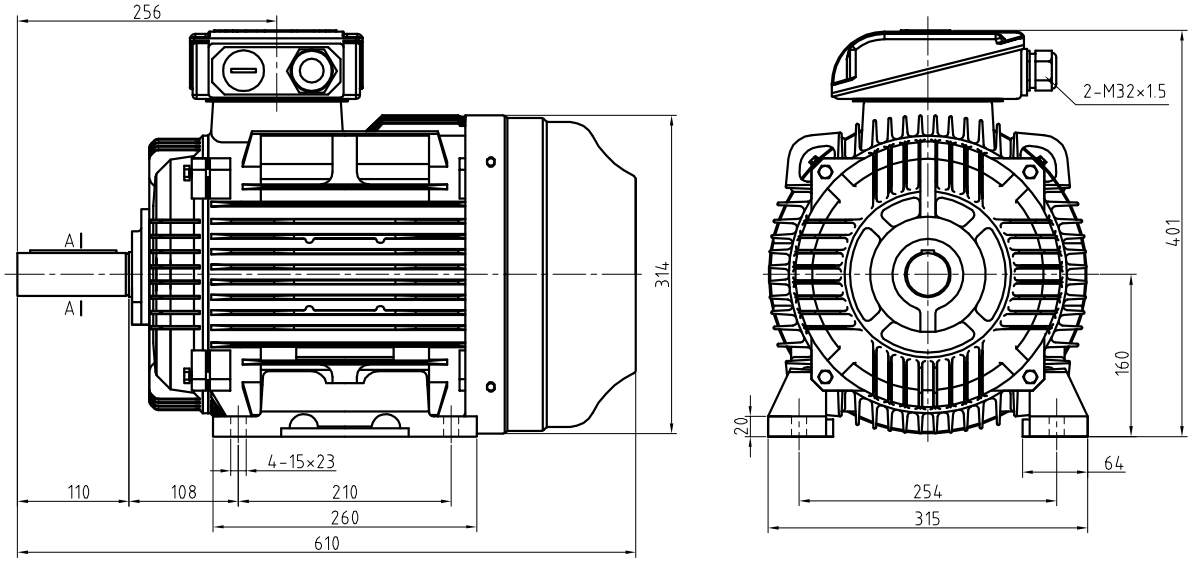


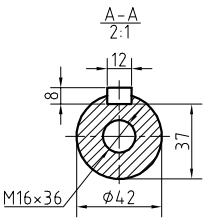



BUSCK
www.busck.eu

Busck & Co AB
Gamla Riksvägen 14
428 32 Göteborg
Sweden
556027-1990
info@busck.se

Busck & Co ApS
Postboks 108
0900 København C
Denmark
info@busck.eu

Busck AS
Skibåsen 35C
4636 Kristiansand
Norway
info@busck.no