TM100LA-2 3KW 230/400V B35

Three-phase asynchronous motor in aluminum

Motor type	TM100LA-2 3KW 230/400V B35
Brand	BUSCK
Item number	93021004UL

Voltage V	Power kW	Frequency Hz	Current A	Speed rpm
230		50		
400		50		
460		60		

Duty	S1	Efficiency class	IE3
Enclosure	IP55		
Insulation class	F	Painting	Standard
Cooling	IC411 (TEFC)	Color	RAL 9005
Max. ambient temp.	45°C	Weight kg	24
Min. ambient temp.	-20°C	Bearing DE	6206-2Z/C3
Max. temp. rise	80 K	Bearing NDE	6206-2Z/C3
Max altitude, masl	1000	Balance grade	Normal
		Cable entries	1xM20, 1xM16
Winding protection	Thermocontacts		

Note	UL-approved

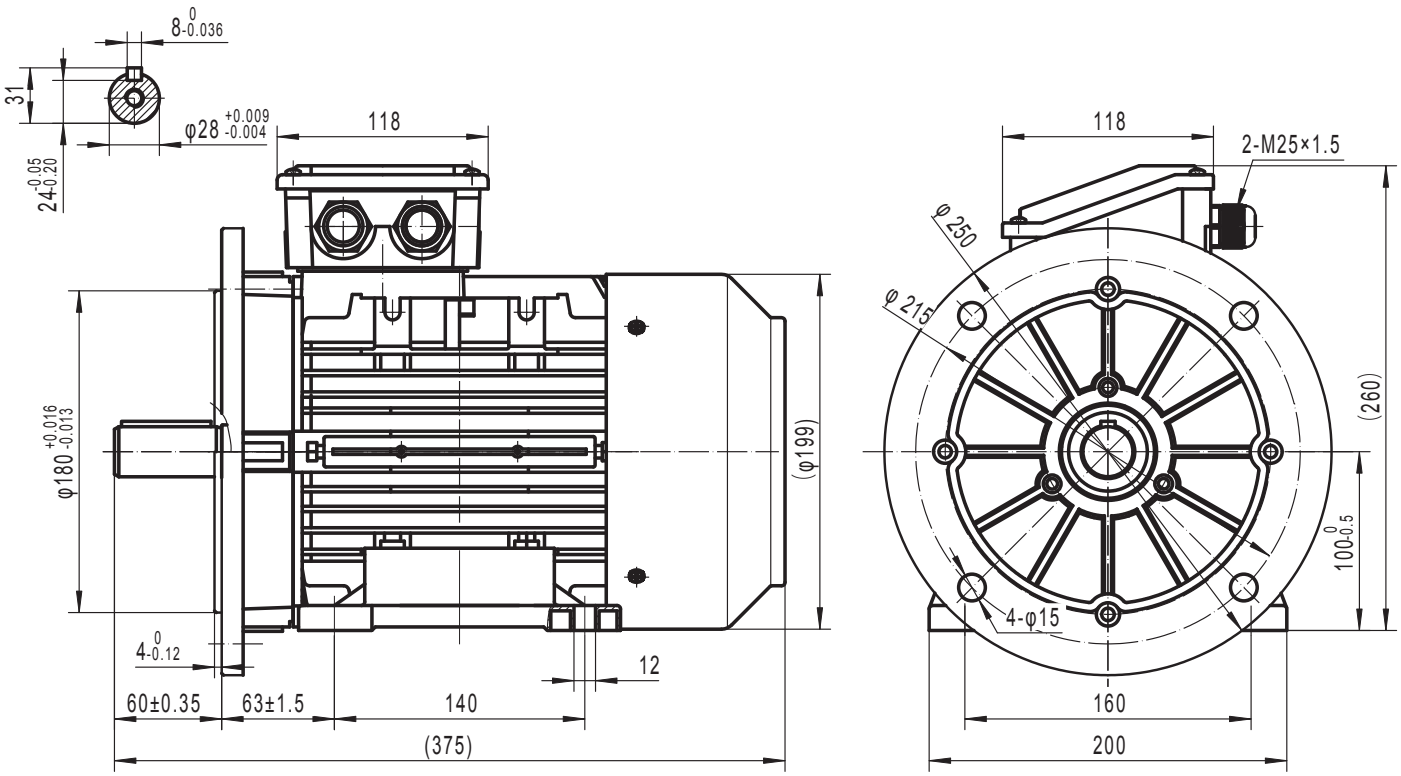

BUSCK
www.busck.eu

Busck & Co AB
Gamla Riksvägen 14
428 32 Göteborg
Sweden
556027-1990
info@busck.se

Busck & Co ApS
Postboks 108
0900 København C
Denmark
info@busck.eu

Busck AS
Skibåsen 35C
4636 Kristiansand
Norway
info@busck.no