T2A71B-2 0,55KW 400/690V B14

Three-phase asynchronous motor in aluminum

Motor type	T2A71B-2 0,55KW 400/690V B14
Brand	BUSCK
Item number	83B20723

Voltage V	Power kW	Frequency Hz	Current A	Speed rpm
400	0,55	50	1,27	2860
690	0,55	50	0,73	2860
460	0,63	60	1,27	3432

Duty	S1	Efficiency class	IE2
Enclosure	IP55	Efficiency, load 100%	75,1
Insulation class	F	Efficiency, load 75%	75,2
Cooling	IC411 (TEFC)	Efficiency, load 50%	71,4
Max. ambient temp.	45°C		
Min. ambient temp.	-20°C	Painting	Standard
Max. temp. rise	80 K	Color	RAL 9005
Max altitude, masl	1000	Weight kg	5,8
		Sound pressure Lp dB(A)	64
Torque, Nm	1,84	Bearing DE	6204-2Z/C3
Starting torque ratio	2,3	Bearing NDE	6204-2Z/C3
Pull up torque ratio	1,5	Balance grade	Normal
Pull out torque ratio	2,4	Inertia kgm2	0,00046
This motor has DNV type approval		Cable entries	1xM20
Note	IE2		

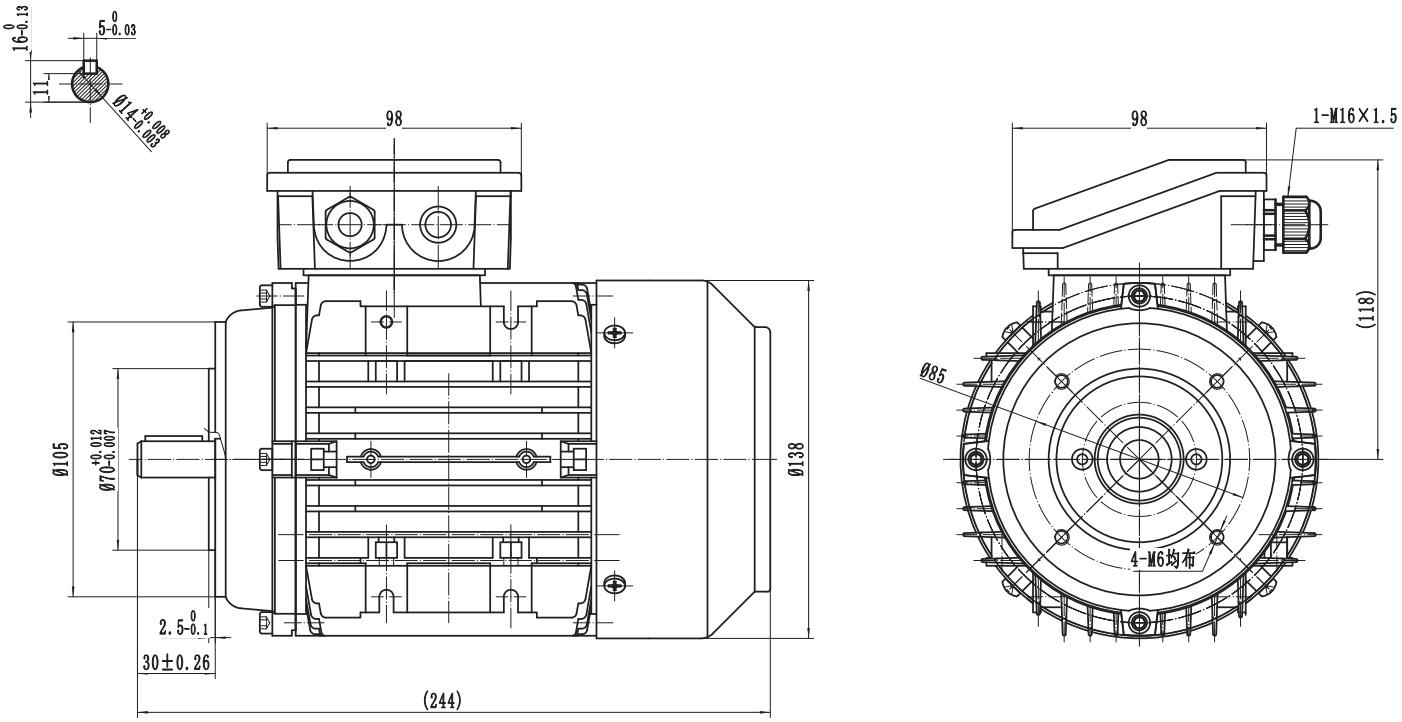

BUSCK
www.busck.eu

Busck & Co AB
Gamla Riksvägen 14
428 32 Göteborg
Sweden
556027-1990
info@busck.se

Busck & Co ApS
Postboks 108
0900 København C
Denmark
info@busck.eu

Busck AS
Skibåsen 35C
4636 Kristiansand
Norway
info@busck.no