WE355MB-6 200KW 230/400V B3

Three-phase asynchronous motor in cast iron

Motor type	WE355MB-6 200KW 230/400V B3
Brand	BUSCK
Item number	83A63561

Voltage V	Power kW	Frequency Hz	Current A	Speed rpm
230	200	50	629,6	990
400	200	50	362,0	990
460	230	60	362,0	1188

Duty	S1
Enclosure	IP55
Insulation class	F
Cooling	IC411 (TEFC)
Max. ambient temp.	40°C
Min. ambient temp.	-20°C
Max. temp. rise	80 K
Max altitude, masl	1000
Torque, Nm	1929
Starting torque ratio	1,9
Pull out torque ratio	2
Starting current ratio	6,7
Winding protection	Thermistors
Note	Axel 100x210 IE2

Efficiency class	IE2
Efficiency, load 100%	94,9
Power fact, load 100%	0,88
Painting	Standard
Color	RAL 9005
Weight kg	1890
Sound pressure Lp dB(A)	75
Bearing DE	NU322
Bearing NDE	6322
Balance grade	Normal
Inertia kgm2	11,1
Cable entries	2xM63 + 1xM16

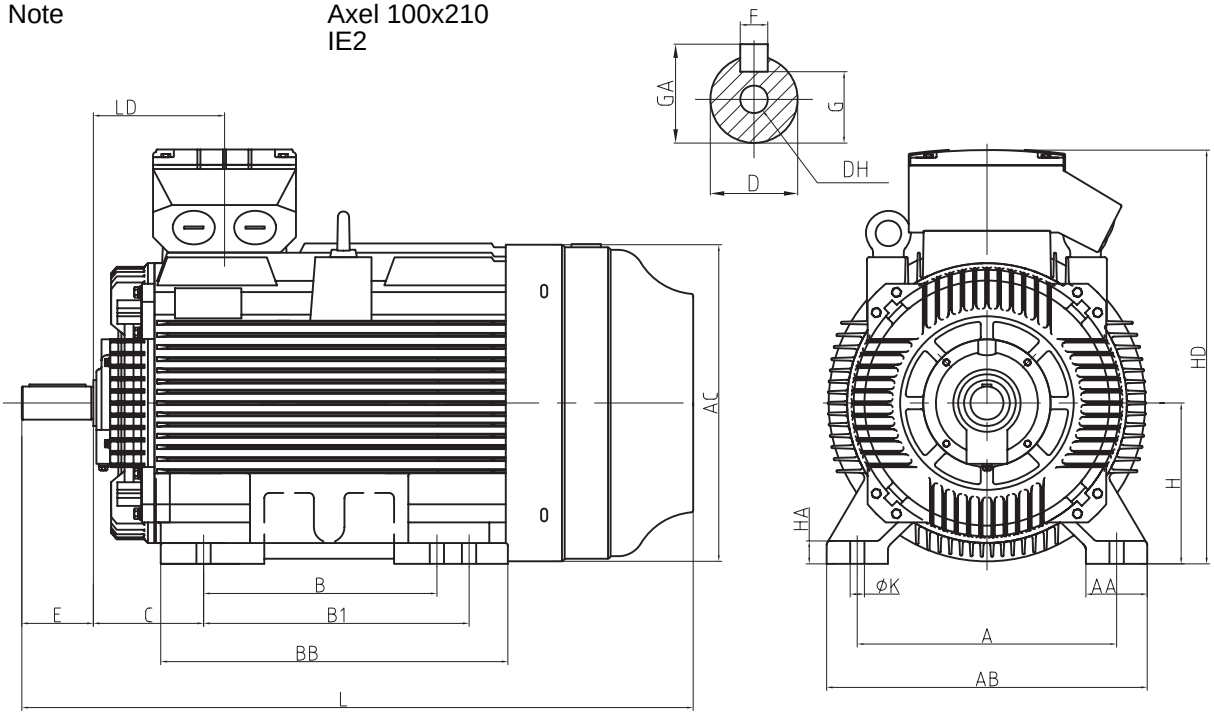

A	B	B1	C	H	D	E	F	G	DH	GA	AA	AB	AC	HA	HD	BB	LD	L
610	560	630	254	355	100	210	28	90	M24	106	116	726	698	52	997	750	288	1596

BUSCK
www.busck.eu

Busck & Co AB
Gamla Riksvägen 14
428 32 Göteborg
Sweden
556027-1990
info@busck.se

Busck & Co ApS
Postboks 108
0900 København C
Denmark
info@busck.eu

Busck AS
Skibåsen 35C
4636 Kristiansand
Norway
info@busck.no