# ME132S-4 5,5KW 230/400V B34

## Three-phase asynchronous motor in aluminum

| | |
|---|---|
| Motor type | ME132S-4 5,5KW 230/400V B34 |
| Brand | BUSCK |
| Item number | 83A41325 |

| Voltage V | Power kW | Frequency Hz | Current A | Speed rpm |
|---|---|---|---|---|
| 230 | 5,5 | 50 | 19,0 | 1450 |
| 400 | 5,5 | 50 | 10,9 | 1450 |
| 460 | 6,33 | 60 | 10,9 | 1740 |

| | | | |
|---|---|---|---|
| Duty | S1 | Efficiency class | IE2 |
| Enclosure | IP55 | Efficiency, load 100% | 87,71 |
| Insulation class | F | Efficiency, load 75% | 88,3 |
| Cooling | IC411 (TEFC) | Efficiency, load 50% | 87,3 |
| Max. ambient temp. | 40°C | Power fact, load 100% | 0,83 |
| Min. ambient temp. | -20°C | | |
| Max. temp. rise | 80 K | Painting | Standard |
| Max altitude, masl | 1000 | Color | RAL 9005 |
| | | Weight kg | 43 |
| Torque, Nm | 36,2 | Sound pressure Lp dB(A) | 71 |
| Starting torque ratio | 2,6 | Bearing DE | 6308-2Z/C3 |
| Pull out torque ratio | 2,7 | Bearing NDE | 6208-2Z/C3 |
| Starting current ratio | 7,4 | Balance grade | Normal |
| | | Inertia kgm2 | 0,0236 |
| Note | IE2 | Cable entries | 2xM25 |

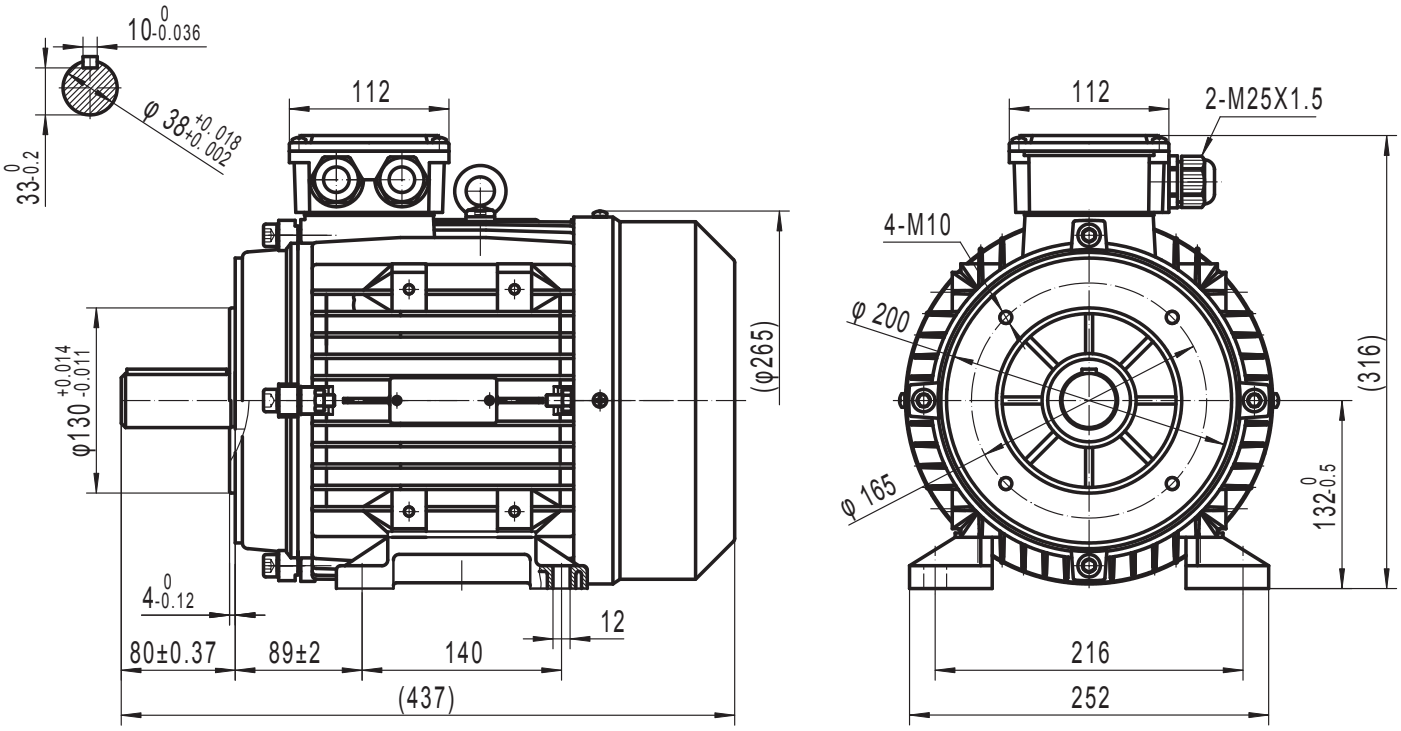



BUSCK
www.busck.eu

Busck & Co AB
Gamla Riksvägen 14
428 32 Göteborg
Sweden
556027-1990
info@busck.se

Busck & Co ApS
Postboks 108
0900 København C
Denmark
info@busck.eu

Busck AS
Skibåsen 35C
4636 Kristiansand
Norway
info@busck.no