ME112M-4 4KW 230/400V B3

Three-phase asynchronous motor in aluminum

Motor type	ME112M-4 4KW 230/400V B3
Brand	BUSCK
Item number	83A41121TK

Voltage V	Power kW	Frequency Hz	Current A	Speed rpm
230	4	50	14,16	1440
400	4	50	8,14	1440
460	4,6	60	8,14	1728

Duty	S1	Efficiency class	IE2
Enclosure	IP55	Efficiency, load 100%	86,6
Insulation class	F	Power fact, load 100%	0,81
Cooling	IC411 (TEFC)		
Max. ambient temp.	40°C	Painting	Standard
Min. ambient temp.	-20°C	Color	RAL 9005
Max. temp. rise	80 K	Weight kg	31
Max altitude, masl	1000	Sound pressure Lp dB(A)	65
		Bearing DE	6306-2Z/C3
Torque, Nm	26,5	Bearing NDE	6206-2Z/C3
Starting torque ratio	3,1	Balance grade	Normal
Pull out torque ratio	2,9	Inertia kgm2	0,01114
Starting current ratio	7,1	Cable entries	2xM25
Winding protection	Thermocontacts		
Note	IE2 Termokontakter		

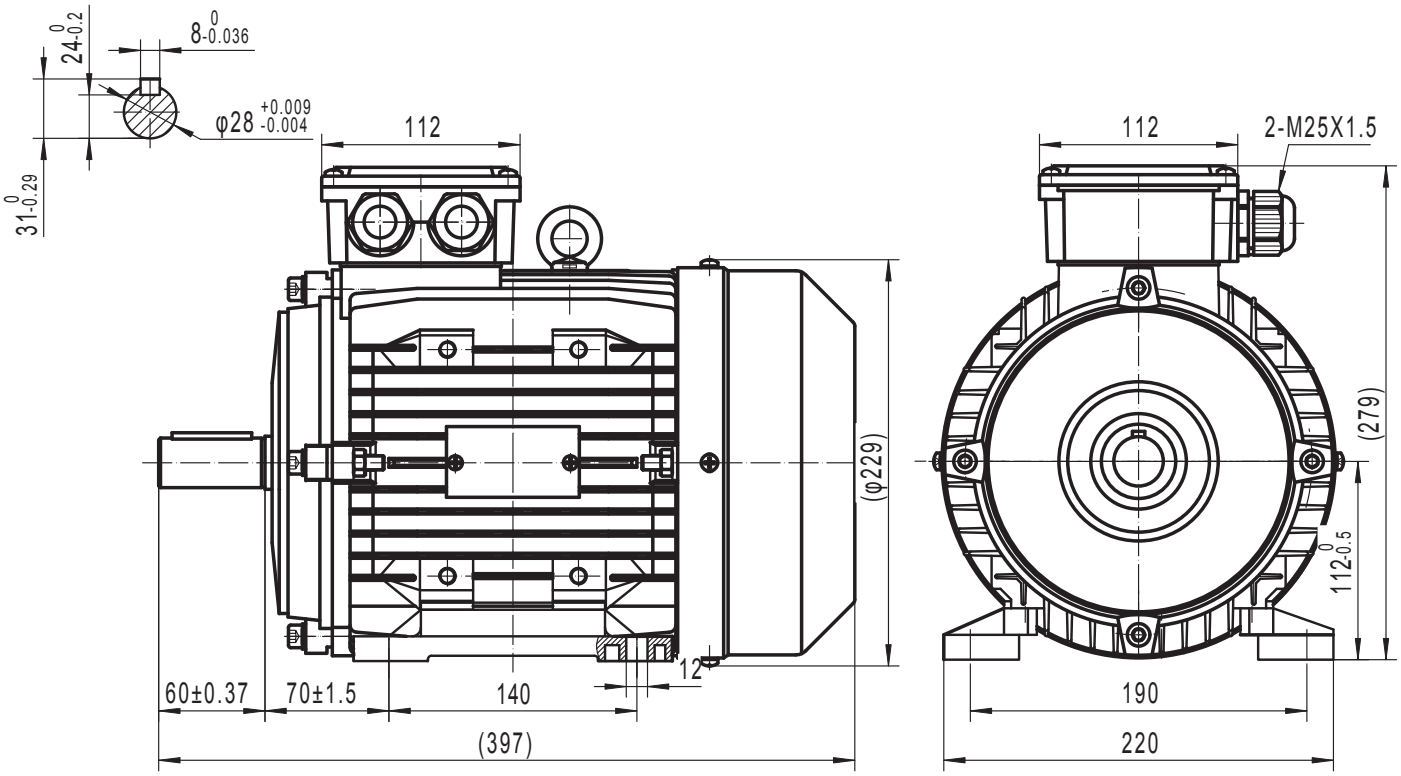

BUSCK
www.busck.eu

Busck & Co AB
Gamla Riksvägen 14
428 32 Göteborg
Sweden
556027-1990
info@busck.se

Busck & Co ApS
Postboks 108
0900 København C
Denmark
info@busck.eu

Busck AS
Skibåsen 35C
4636 Kristiansand
Norway
info@busck.no