ME132SB-2 7,5KW 230/400V B34

Three-phase asynchronous motor in aluminum

Motor type	ME132SB-2 7,5KW 230/400V B34
Brand	BUSCK
Item number	83A21335

Voltage V	Power kW	Frequency Hz	Current A	Speed rpm
230	7,5	50	24,0	2910
400	7,5	50	13,8	2910
460	8,63	60	13,8	3492

Duty	S1	Efficiency class	IE2
Enclosure	IP55	Efficiency, load 100%	88,1
Insulation class	F	Efficiency, load 75%	88,3
Cooling	IC411 (TEFC)	Efficiency, load 50%	87,3
Max. ambient temp.	40°C	Power fact, load 100%	0,88
Min. ambient temp.	-20°C		
Max. temp. rise	80 K	Painting	Standard
Max altitude, masl	1000	Color	RAL 9005
		Weight kg	48
Torque, Nm	25	Sound pressure Lp dB(A)	80
Starting torque ratio	2,6	Bearing DE	6308-2Z/C3
Pull out torque ratio	3,2	Bearing NDE	6208-2Z/C3
Starting current ratio	8,4	Balance grade	Normal
		Inertia kgm2	0,01431
Note	IE2	Cable entries	2xM25

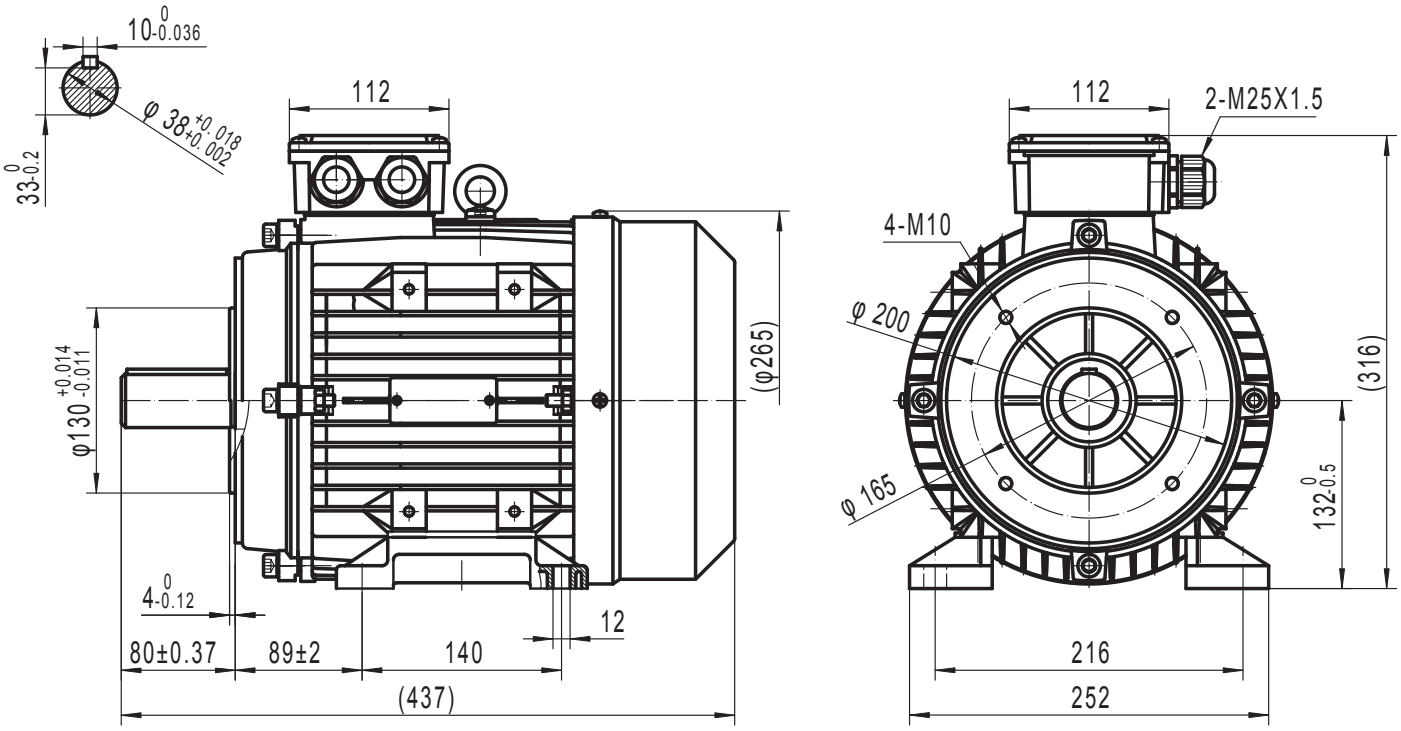

BUSCK
www.busck.eu

Busck & Co AB
Gamla Riksvägen 14
428 32 Göteborg
Sweden
556027-1990
info@busck.se

Busck & Co ApS
Postboks 108
0900 København C
Denmark
info@busck.eu

Busck AS
Skibåsen 35C
4636 Kristiansand
Norway
info@busck.no