T2A71A-4 0,25KW 230/400V B14

Three-phase asynchronous motor in aluminum

Motor type	T2A71A-4 0,25KW 230/400V B14
Brand	BUSCK
Item number	83040713

Voltage V	Power kW	Frequency Hz	Current A	Speed rpm
230	0,25	50	1,34	1400
400	0,25	50	0,77	1400
460	0,29	60	0,77	1680

Duty	S1	Efficiency class	IE2
Enclosure	IP55	Efficiency, load 100%	69,6
Insulation class	F	Efficiency, load 75%	68,5
Cooling	IC411 (TEFC)	Efficiency, load 50%	62,9
Max. ambient temp.	45°C	Power fact, load 100%	0,67
Min. ambient temp.	-20°C		
Max. temp. rise	80 K	Painting	Standard
Max altitude, masl	1000	Color	RAL 9005
		Weight kg	5,2
Torque, Nm	1,71	Sound pressure Lp dB(A)	55
Starting torque ratio	2,2	Bearing DE	6204-2Z/C3
Pull up torque ratio	1,8	Bearing NDE	6204-2Z/C3
Pull out torque ratio	2,3	Balance grade	Normal
Starting current ratio	4,1	Inertia kgm2	0,00059
This motor has DNV type approval		Cable entries	1xM20
Note	IE2		

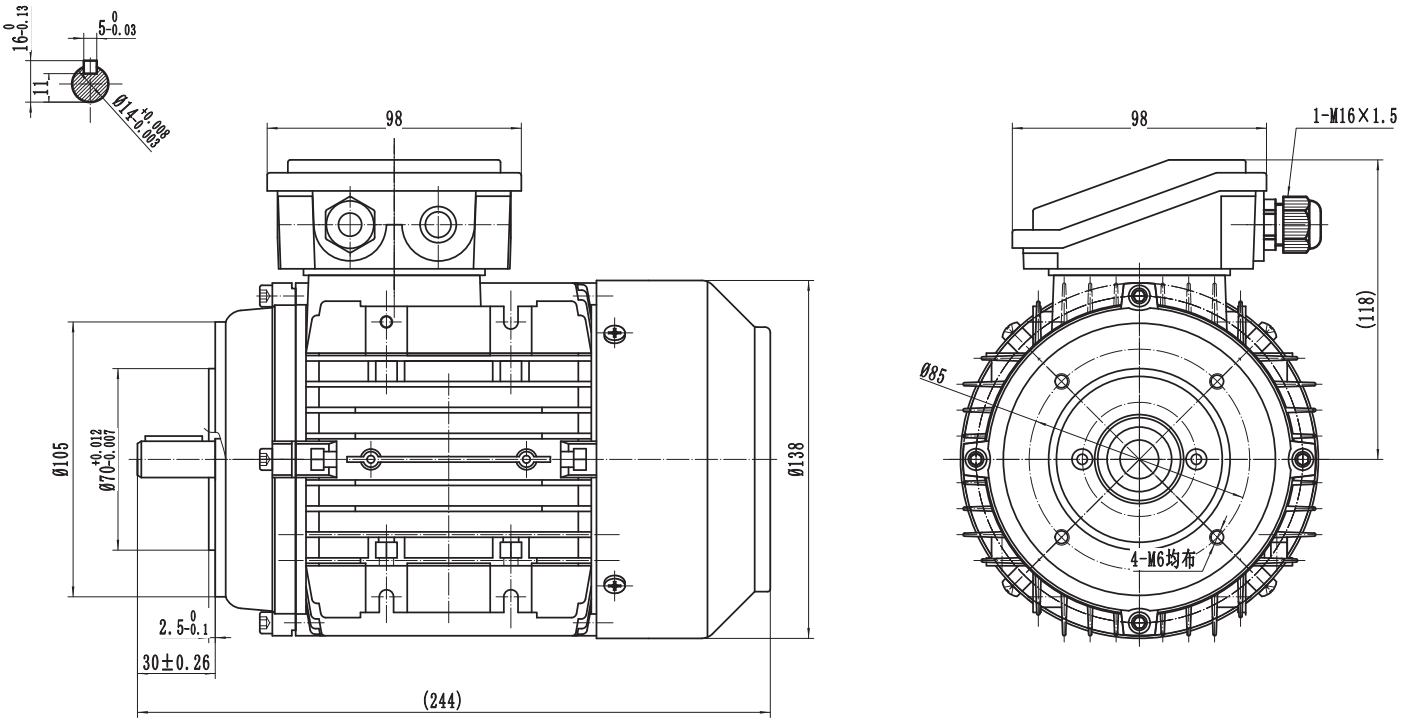

BUSCK
www.busck.eu

Busck & Co AB
Gamla Riksvägen 14
428 32 Göteborg
Sweden
556027-1990
info@busck.se

Busck & Co ApS
Postboks 108
0900 København C
Denmark
info@busck.eu

Busck AS
Skibåsen 35C
4636 Kristiansand
Norway
info@busck.no