ME80B-2 1,1KW 230/400V B34

Three-phase asynchronous motor in aluminum

Motor type	ME80B-2 1,1KW 230/400V B34
Brand	BUSCK
Item number	83020815

Voltage V	Power kW	Frequency Hz	Current A	Speed rpm
230	1,1	50	4,12	2850
400	1,1	50	2,37	2850
460	1,27	60	2,37	3420

Duty	S1	Efficiency class	IE2
Enclosure	IP55	Efficiency, load 100%	79,6
Insulation class	F	Efficiency, load 75%	79,7
Cooling	IC411 (TEFC)	Efficiency, load 50%	77,2
Max. ambient temp.	40°C	Power fact, load 100%	0,82
Min. ambient temp.	-20°C		
Max. temp. rise	80 K	Painting	Standard
Max altitude, masl	1000	Color	RAL 9005
		Weight kg	10
Torque, Nm	3,69	Sound pressure Lp dB(A)	67
Starting torque ratio	3,5	Bearing DE	6204-2Z/C3
Pull up torque ratio	2,6	Bearing NDE	6204-2Z/C3
Pull out torque ratio	3,6	Balance grade	Normal
Starting current ratio	6,8	Inertia kgm2	0,00098
		Cable entries	1xM20
Note	IE2 Färg svart		

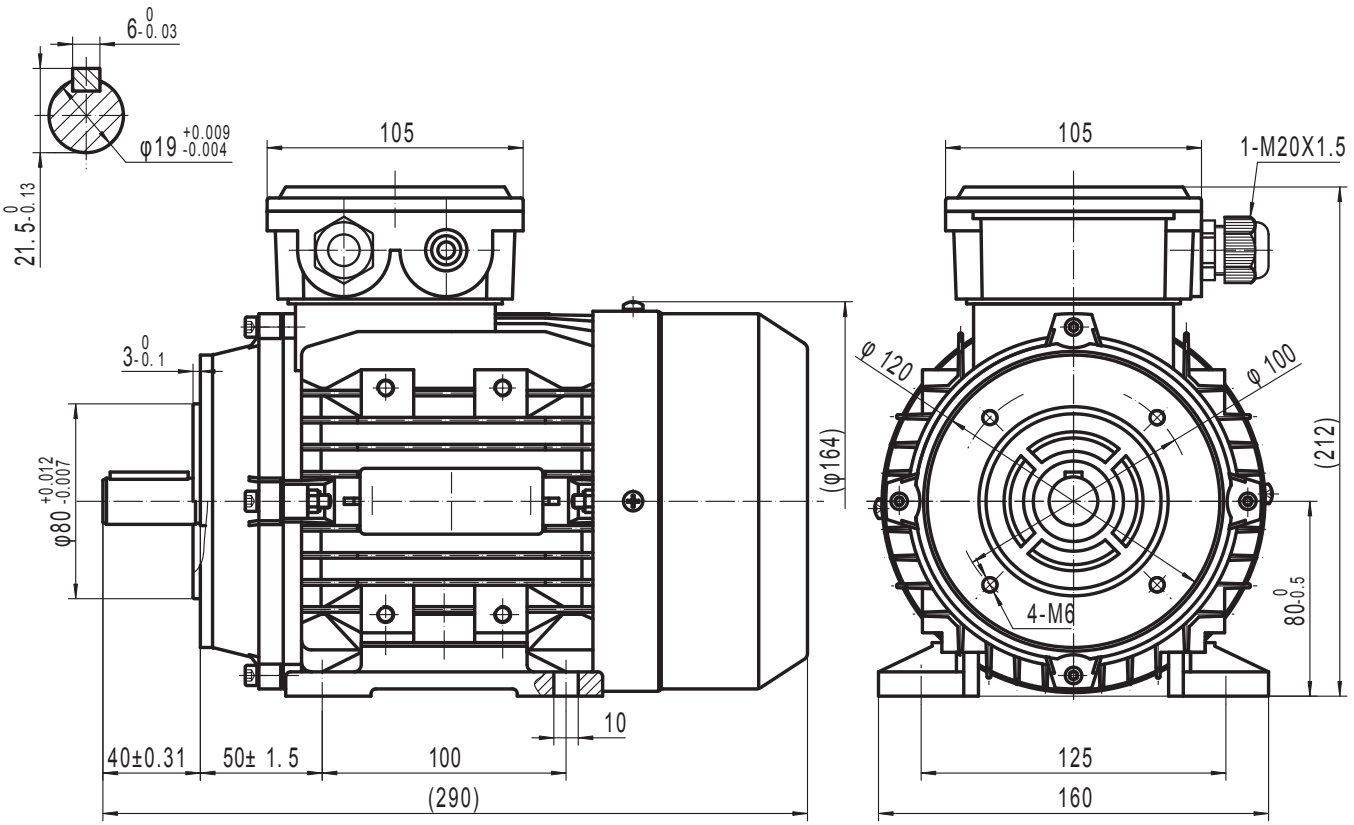

BUSCK
www.busck.eu

Busck & Co AB
Gamla Riksvägen 14
428 32 Göteborg
Sweden
556027-1990
info@busck.se

Busck & Co ApS
Postboks 108
0900 København C
Denmark
info@busck.eu

Busck AS
Skibåsen 35C
4636 Kristiansand
Norway
info@busck.no