T4CR180M-4 18,5KW 400/690V B5

Single-phase asynchronous motor in aluminum

Motor type	T4CR180M-4 18,5KW 400/690V B5
Brand	BUSCK
Item number	43041802T

Voltage V	Power kW	Frequency Hz	Current A	Speed rpm
400	18,5	50	33,4	1475
690	18,5	50	19,2	1475
460	21,28	60	33,4	1770

Duty	S1
Enclosure	IP55
Insulation class	F
Cooling	IC411 (TEFC)
Max. ambient temp.	45°C
Max. temp. rise	80 K
Max altitude, masl	1000
Torque, Nm	119,83
Starting torque ratio	2
Pull up torque ratio	1,2
Pull out torque ratio	2,3
Starting current ratio	9,5
This motor has DNV type approval	
Note	IE4

Efficiency class	IE4
Efficiency, load 100%	94,2
Efficiency, load 75%	94,4
Efficiency, load 50%	93,6
Power fact, load 100%	0,85
Painting	Standard
Color	RAL 9005
Weight kg	218
Sound pressure Lp dB(A)	76
Bearing DE	6311 C3
Bearing NDE	6311 C3
Balance grade	Normal
Inertia kgm2	0,26556040836
Cable entries	2xM32, 1xM16

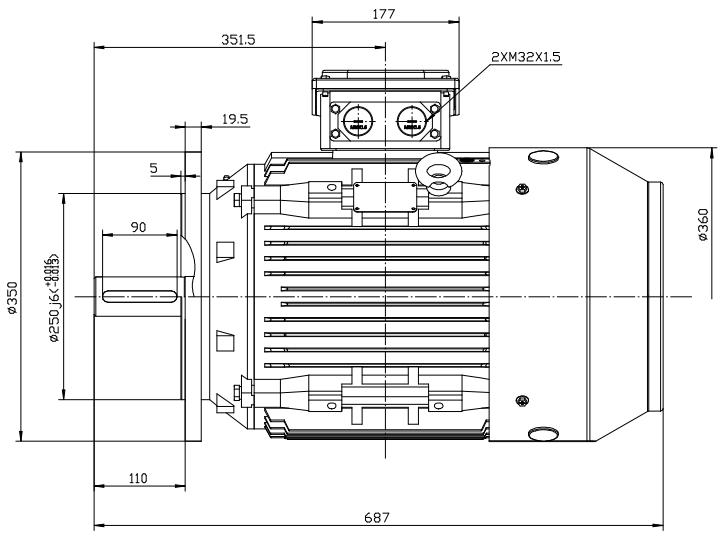

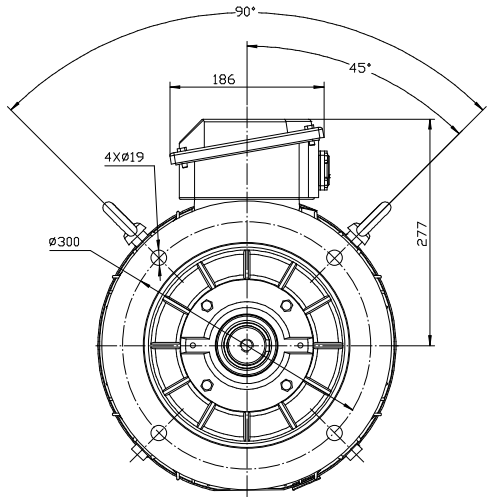

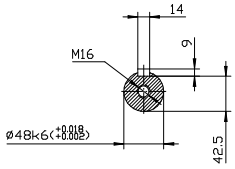

TC 180M B5

BUSCK
www.busck.eu

Busck & Co AB
Gamla Riksvägen 14
428 32 Göteborg
Sweden
556027-1990
info@busck.se

Busck & Co ApS
Postboks 108
0900 København C
Denmark
info@busck.eu

Busck AS
Skibåsen 35C
4636 Kristiansand
Norway
info@busck.no