# T4A80A-4 0,55KW 230/400V B34

## Three-phase asynchronous motor in aluminum

| | |
|---|---|
| Motor type | T4A80A-4 0,55KW 230/400V B34 |
| Brand | BUSCK |
| Item number | 43040805 |

| Voltage V | Power kW | Frequency Hz | Current A | Speed rpm |
|---|---|---|---|---|
| 230 | 0,55 | 50 | 2,45 | 1440 |
| 400 | 0,55 | 50 | 1,41 | 1440 |
| 460 | 0,63 | 60 | 1,41 | 1728 |

| | | | |
|---|---|---|---|
| Duty | S1 | Efficiency class | IE4 |
| Enclosure | IP55 | Efficiency, load 100% | 83,9 |
| Insulation class | F | Efficiency, load 75% | 83,3 |
| Cooling | IC411 (TEFC) | Efficiency, load 50% | 80,6 |
| Max. ambient temp. | 45°C | Power fact, load 100% | 0,67 |
| Min. ambient temp. | -20°C | | |
| Max. temp. rise | 80 K | Painting | Standard |
| Max altitude, masl | 1000 | Color | RAL 9005 |
| | | Weight kg | 11 |
| Torque, Nm | 3,8003 | Sound pressure Lp dB(A) | 57 |
| Starting torque ratio | 3,4 | Bearing DE | 6204-2Z/C3 |
| Pull up torque ratio | 3,0 | Bearing NDE | 6204-2Z/C3 |
| Pull out torque ratio | 3,7 | Balance grade | Normal |
| Starting current ratio | 6,8 | Inertia kgm2 | 0,002047 |
| This motor has DNV type approval | | Cable entries | 1xM20 |

| | |
|---|---|
| Note | Termokontakt<br>IE4 |

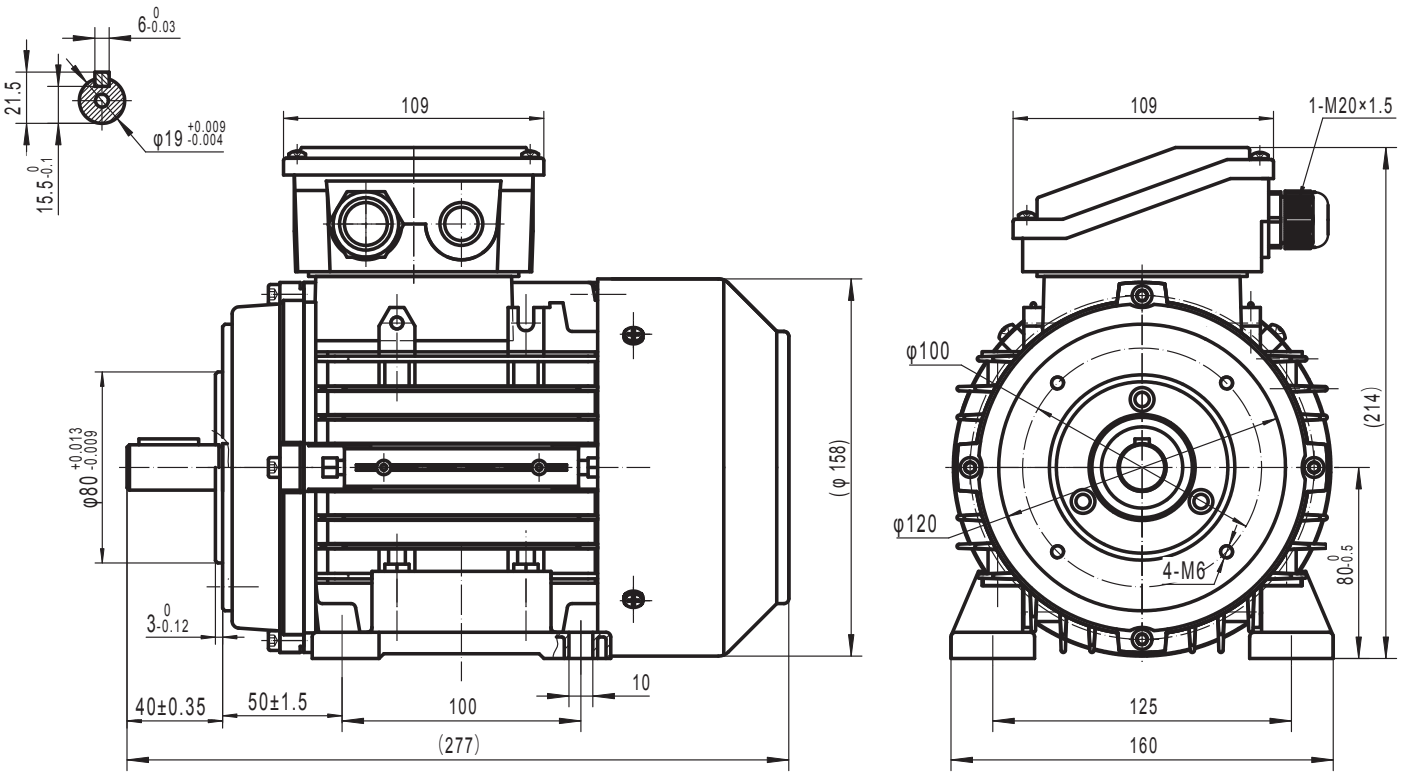



BUSCK
www.busck.eu

Busck & Co AB
Gamla Riksvägen 14
428 32 Göteborg
Sweden
556027-1990
info@busck.se

Busck & Co ApS
Postboks 108
0900 København C
Denmark
info@busck.eu

Busck AS
Skibåsen 35C
4636 Kristiansand
Norway
info@busck.no