T4A71B-4 0,37KW 230/400V B14

Three-phase asynchronous motor in aluminum

Motor type	T4A71B-4 0,37KW 230/400V B14
Brand	BUSCK
Item number	43040723

Voltage V	Power kW	Frequency Hz	Current A	Speed rpm
230	0,37	50	1,74	1430
400	0,37	50	1,00	1430
460	0,43	60	1,00	1716

Duty	S1	Efficiency class	IE4
Enclosure	IP55	Efficiency, load 100%	81,1
Insulation class	F	Efficiency, load 75%	80,5
Cooling	IC411 (TEFC)	Efficiency, load 50%	77,2
Max. ambient temp.	45°C	Power fact, load 100%	0,66
Min. ambient temp.	-20°C		
Max. temp. rise	80 K	Painting	Standard
Max altitude, masl	1000	Color	RAL 9005
		Weight kg	8
Torque, Nm	2,5745	Sound pressure Lp dB(A)	55
Starting torque ratio	3,4	Bearing DE	6204-2Z/C3
Pull up torque ratio	3,0	Bearing NDE	6204-2Z/C3
Pull out torque ratio	3,6	Balance grade	Normal
Starting current ratio	6,2	Inertia kgm2	0,001188
This motor has DNV type approval		Cable entries	1xM20

Note	Termokontakt IE4

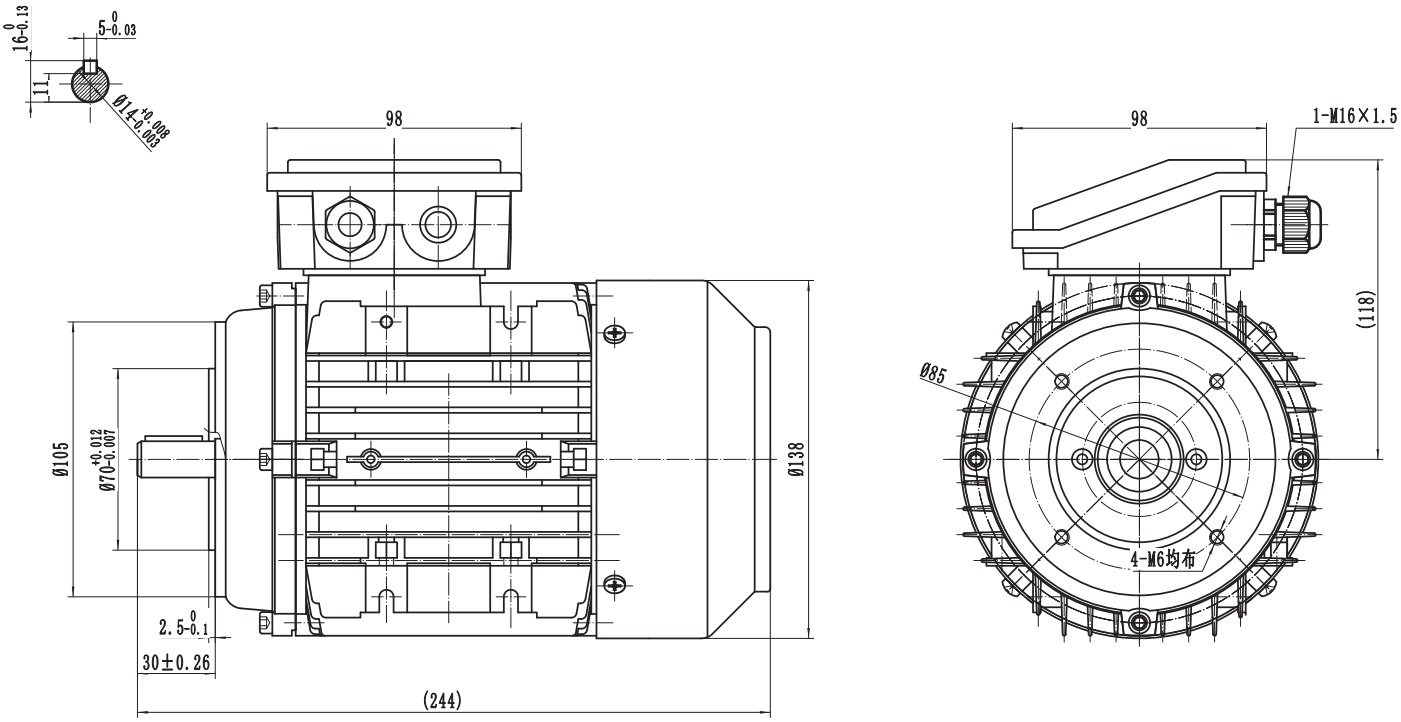

BUSCK
www.busck.eu

Busck & Co AB
Gamla Riksvägen 14
428 32 Göteborg
Sweden
556027-1990
info@busck.se

Busck & Co ApS
Postboks 108
0900 København C
Denmark
info@busck.eu

Busck AS
Skibåsen 35C
4636 Kristiansand
Norway
info@busck.no