T4CR180M-2 22KW 400/690V B5

Three-phase asynchronous motor in cast iron

Motor type	T4CR180M-2 22KW 400/690V B5
Brand	BUSCK
Item number	43021802T

Voltage V	Power kW	Frequency Hz	Current A	Speed rpm
400	22	50	38,0	2965
690	22	50	21,8	2965
460	25,3	60	38,0	3558

Duty	S1	Efficiency class	IE4
Enclosure	IP55	Efficiency, load 100%	94
Insulation class	F	Efficiency, load 75%	94,2
Cooling	IC411 (TEFC)	Efficiency, load 50%	93,8
Max. ambient temp.	40°C	Power fact, load 100%	0,89
Min. ambient temp.	-20°C		
Max. temp. rise	80 K	Painting	Standard
Max altitude, masl	1000	Color	RAL 9005
		Weight kg	220
Torque, Nm	70,9	Sound pressure Lp dB(A)	83
Starting torque ratio	2	Bearing DE	6311 C3
Pull up torque ratio	1,1	Bearing NDE	6311 C3
Pull out torque ratio	2,3	Balance grade	Normal
Starting current ratio	9,5	Inertia kgm2	0,16327152862
		Cable entries	2xM32, 1xM16
Note	IE4 Förstärkt isolation		

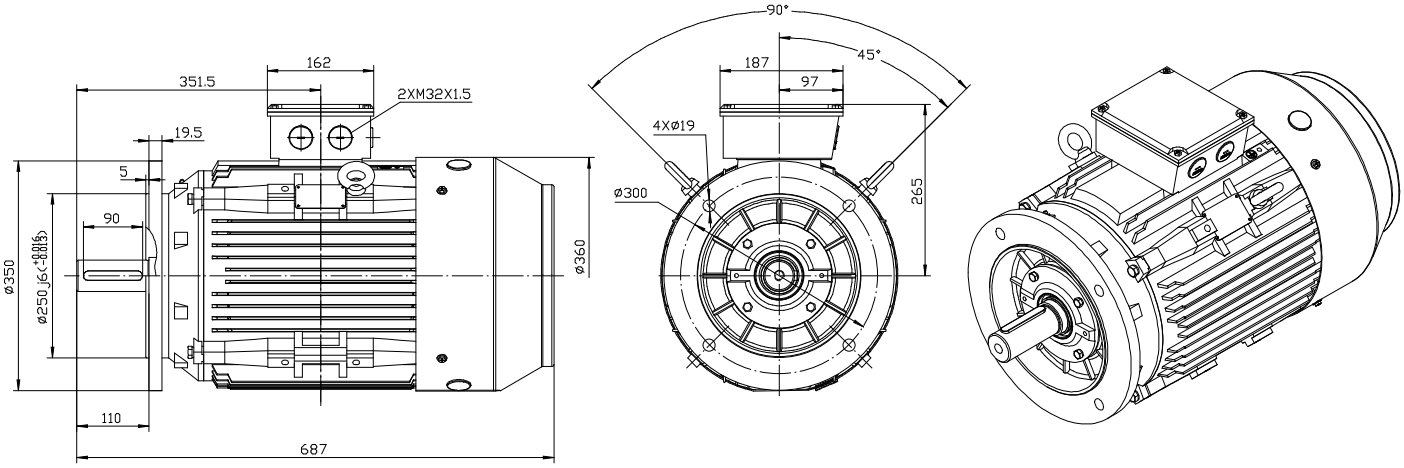

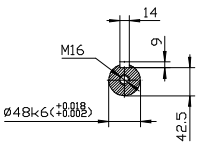

TC 180M B5

BUSCK
www.busck.eu

Busck & Co AB
Gamla Riksvägen 14
428 32 Göteborg
Sweden
556027-1990
info@busck.se

Busck & Co ApS
Postboks 108
0900 København C
Denmark
info@busck.eu

Busck AS
Skibåsen 35C
4636 Kristiansand
Norway
info@busck.no