T4A71B-2 0,55KW 230/400V B14

Three-phase asynchronous motor in aluminum

Motor type	T4A71B-2 0,55KW 230/400V B14
Brand	BUSCK
Item number	43020723

Voltage V	Power kW	Frequency Hz	Current A	Speed rpm
230	0,55	50	2,14	2890
400	0,55	50	1,23	2890
460	0,63	60	1,23	3468

Duty	S1	Efficiency class	IE4
Enclosure	IP55	Efficiency, load 100%	81,5
Insulation class	F	Efficiency, load 75%	81,1
Cooling	IC411 (TEFC)	Efficiency, load 50%	77,9
Max. ambient temp.	45°C	Power fact, load 100%	0,79
Min. ambient temp.	-20°C		
Max. temp. rise	80 K	Painting	Standard
Max altitude, masl	1000	Color	RAL 9005
		Weight kg	6,7
Torque, Nm	1,8936	Sound pressure Lp dB(A)	64
Starting torque ratio	2,9	Bearing DE	6204-2Z/C3
Pull up torque ratio	2,5	Bearing NDE	6204-2Z/C3
Pull out torque ratio	3,5	Balance grade	Normal
Starting current ratio	6,8	Inertia kgm2	0,000569
This motor has DNV type approval		Cable entries	1xM20

Note	Termokontakt IE4

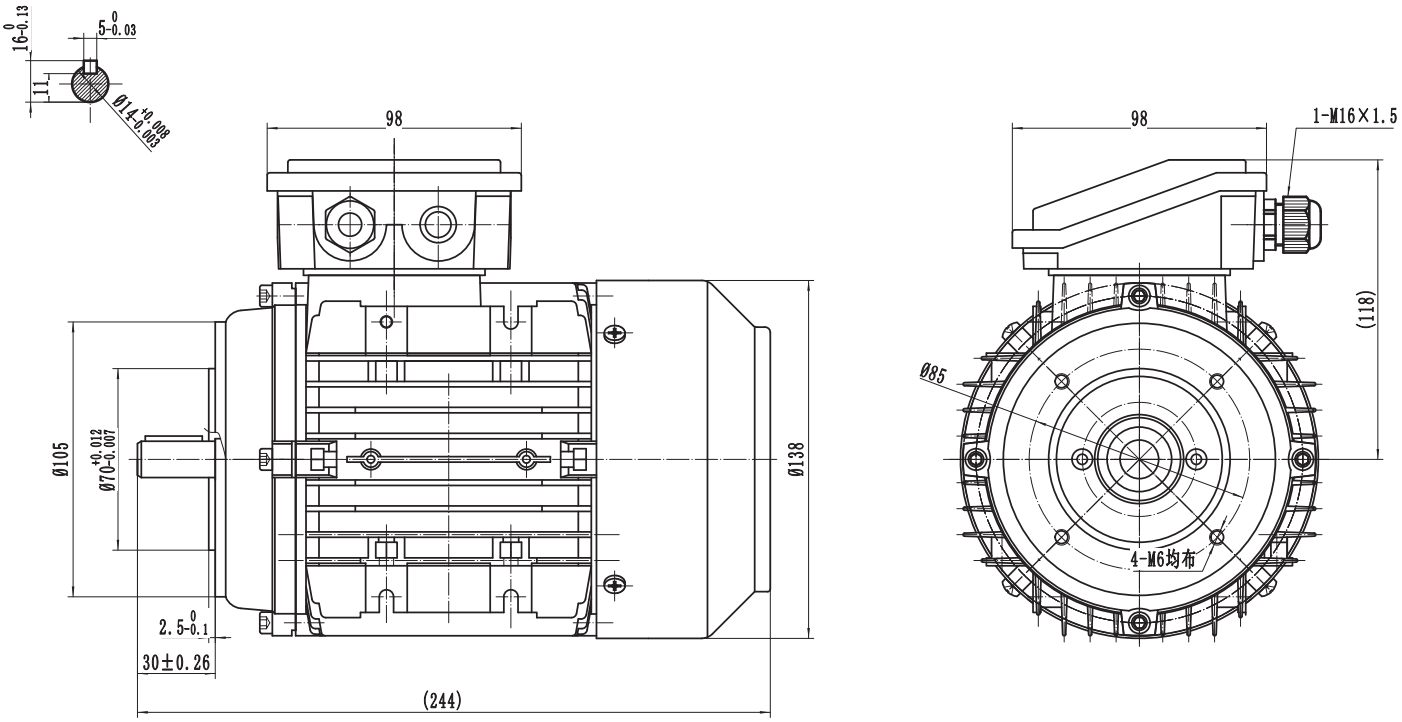

BUSCK
www.busck.eu

Busck & Co AB
Gamla Riksvägen 14
428 32 Göteborg
Sweden
556027-1990
info@busck.se

Busck & Co ApS
Postboks 108
0900 København C
Denmark
info@busck.eu

Busck AS
Skibåsen 35C
4636 Kristiansand
Norway
info@busck.no