ML2-100LB-4 3KW 230V B3

Single-phase asynchronous motor in aluminum

Motor type	ML2-100LB-4 3KW 230V B3
Brand	BUSCK
Item number	23041011e

Voltage V	Power kW	Frequency Hz	Current A	Speed rpm
230	3,00	50	15,89	1460

Duty	S1
Enclosure	IP55
Insulation class	F
Cooling	IC411 (TEFC)
Max. ambient temp.	40°C
Min. ambient temp.	-20°C
Max. temp. rise	80 K
Max altitude, masl	1000
Torque, Nm	19,62
Starting torque ratio	2,30
Pull out torque ratio	1,80
Starting current ratio	6,50
Note	IE2

Efficiency class	IE2
Efficiency, load 100%	85,5
Efficiency, load 75%	85,0
Efficiency, load 50%	80,06
Power fact, load 100%	0,96
Painting	Standard
Color	RAL 9005
Weight kg	30
Sound pressure Lp dB(A)	78
Bearing DE	6205-2Z/C3
Bearing NDE	6205-2Z/C3
Balance grade	Normal
Inertia kgm2	0,01139257
Cable entries	1xM20
Run capacitator, uF	60
Start Capacitator, uF	350

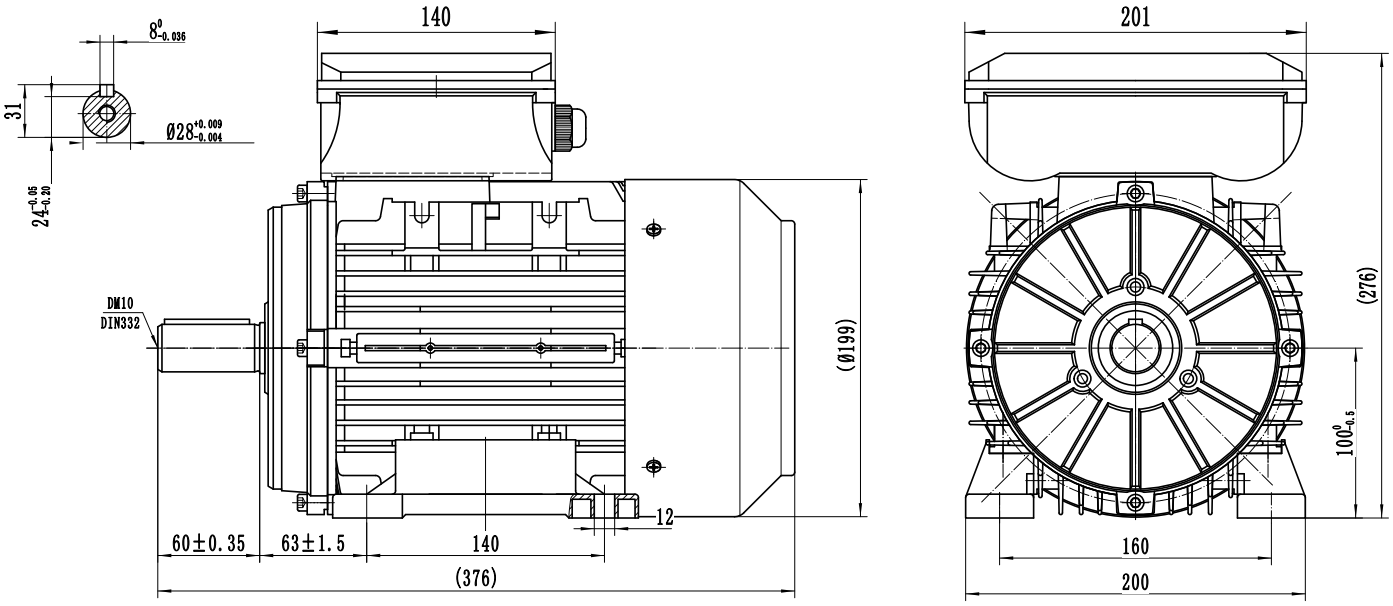

BUSCK
www.busck.eu

Busck & Co AB
Gamla Riksvägen 14
428 32 Göteborg
Sweden
556027-1990
info@busck.se

Busck & Co ApS
Postboks 108
0900 København C
Denmark
info@busck.eu

Busck AS
Skibåsen 35C
4636 Kristiansand
Norway
info@busck.no