ML2-63A-4 0,12KW 230V B5

Single-phase asynchronous motor in aluminum

Motor type	ML2-63A-4 0,12KW 230V B5
Brand	BUSCK
Item number	23040632e

Voltage V	Power kW	Frequency Hz	Current A	Speed rpm
230	0,12	50	0,89	1425

Duty	S1
Enclosure	IP55
Insulation class	F
Cooling	IC411 (TEFC)
Max. ambient temp.	40°C
Min. ambient temp.	-20°C
Max. temp. rise	80 K
Max altitude, masl	1000
Torque, Nm	0,80
Starting torque ratio	2,40
Pull out torque ratio	1,80
Starting current ratio	5,50
Note	IE2

Efficiency class	IE2
Efficiency, load 100%	59,1
Efficiency, load 75%	51,7
Efficiency, load 50%	39,5
Power fact, load 100%	0,99
Painting	Standard
Color	RAL 9005
Weight kg	4
Sound pressure Lp dB(A)	65
Bearing DE	6201-2Z/C3
Bearing NDE	6201-2Z/C3
Balance grade	Normal
Inertia kgm2	0,000358521
Cable entries	1xM16
Run capacitator, uF	8
Start Capacitator, uF	30

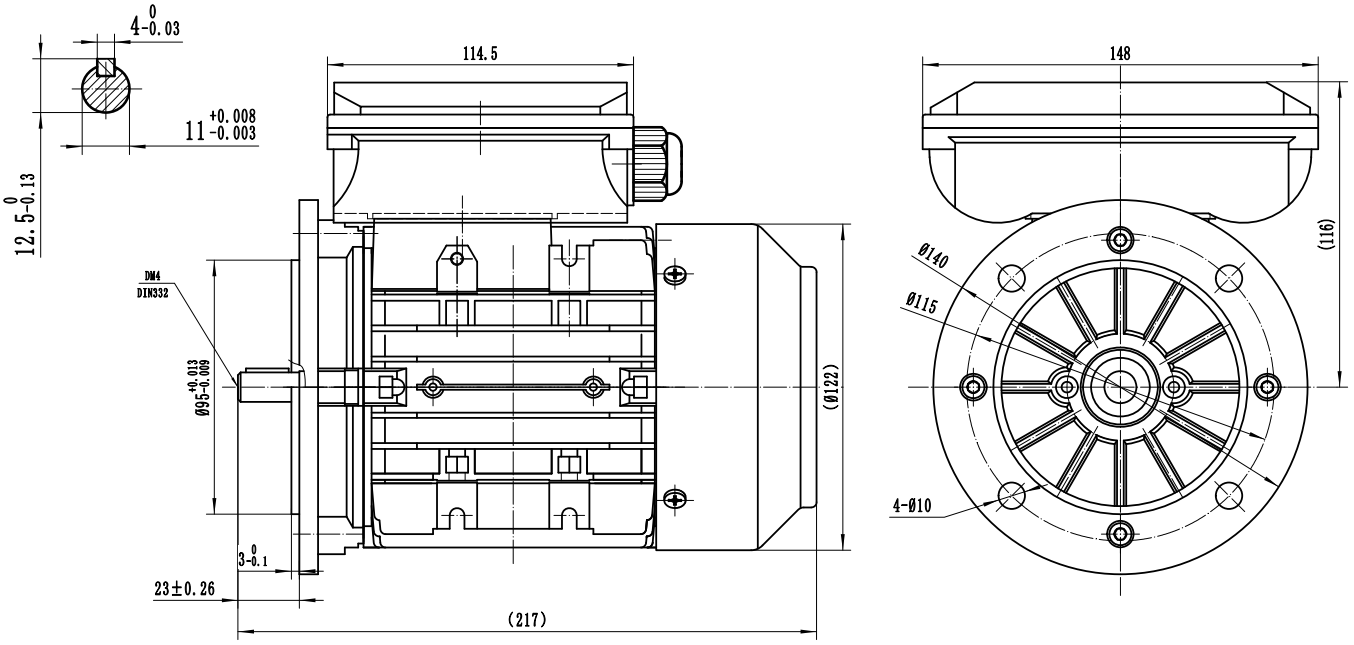

BUSCK
www.busck.eu

Busck & Co AB
Gamla Riksvägen 14
428 32 Göteborg
Sweden
556027-1990
info@busck.se

Busck & Co ApS
Postboks 108
0900 København C
Denmark
info@busck.eu

Busck AS
Skibåsen 35C
4636 Kristiansand
Norway
info@busck.no