ML2-90L-2 2,2KW 230V B14

Single-phase asynchronous motor in aluminum

Motor type	ML2-90L-2 2,2KW 230V B14
Brand	BUSCK
Item number	23020913e

Voltage V	Power kW	Frequency Hz	Current A	Speed rpm
230	2,20	50	11,61	2880

Duty	S1	Efficiency class	IE2
Enclosure	IP55	Efficiency, load 100%	83,2
Insulation class	F	Efficiency, load 75%	83,6
Cooling	IC411 (TEFC)	Efficiency, load 50%	79,5
Max. ambient temp.	40°C	Power fact, load 100%	0,99
Min. ambient temp.	-20°C		
Max. temp. rise	80 K	Painting	Standard
Max altitude, masl	1000	Color	RAL 9005
		Weight kg	18
Torque, Nm	7,30	Sound pressure Lp dB(A)	80
Starting torque ratio	2,50	Bearing DE	6205-2Z/C3
Pull out torque ratio	1,80	Bearing NDE	6205-2Z/C3
Starting current ratio	6,70	Balance grade	Normal
		Inertia kgm2	0,002227885
Note	IE2	Cable entries	1xM20
		Run capacitor, uF	50
		Start Capacitator, uF	250

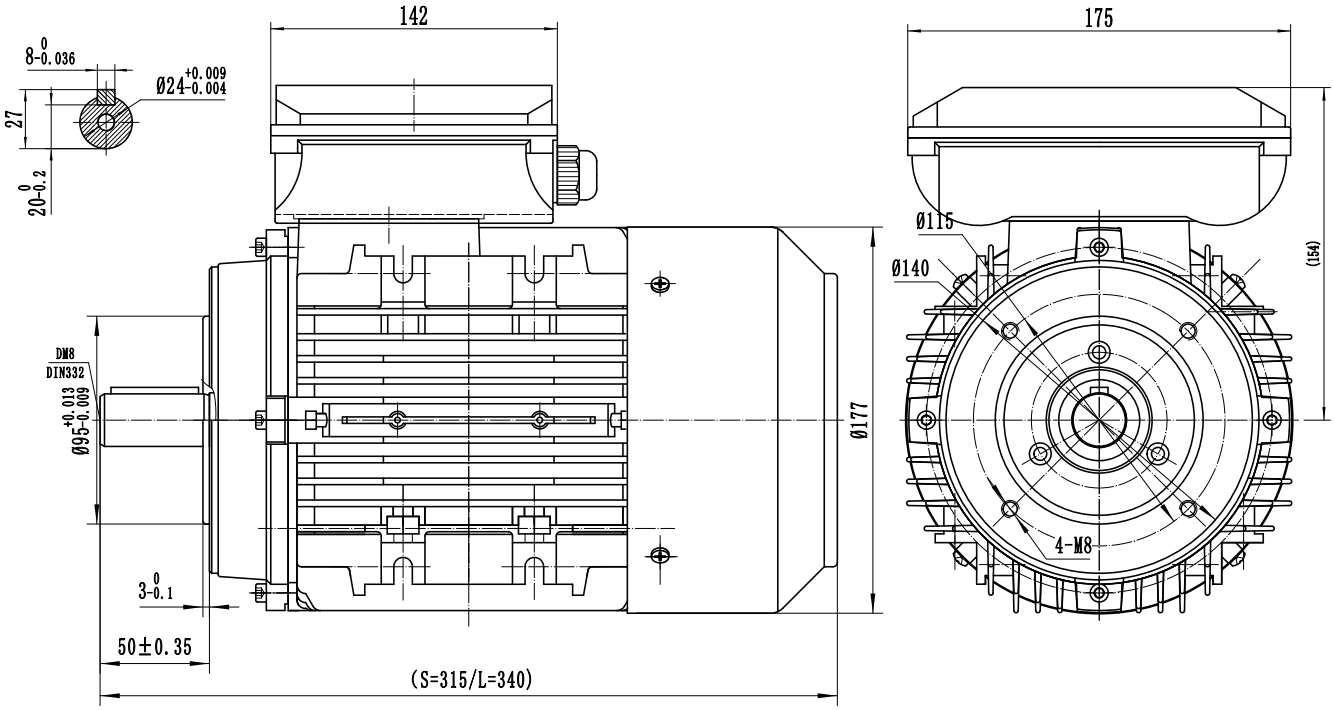

BUSCK
www.busck.eu

Busck & Co AB
Gamla Riksvägen 14
428 32 Göteborg
Sweden
556027-1990
info@busck.se

Busck & Co ApS
Postboks 108
0900 København C
Denmark
info@busck.eu

Busck AS
Skibåsen 35C
4636 Kristiansand
Norway
info@busck.no