# ML2-71B-2 0,55KW 230V B34

## Single-phase asynchronous motor in aluminum

| | |
|---|---|
| Motor type | ML2-71B-2 0,55KW 230V B34 |
| Brand | BUSCK |
| Item number | 23020725e |

| Voltage V | Power kW | Frequency Hz | Current A | Speed rpm |
|---|---|---|---|---|
| 230 | 0,55 | 50 | 3,36 | 2795 |

| | |
|---|---|
| Duty | S1 |
| Enclosure | IP55 |
| Insulation class | F |
| Cooling | IC411 (TEFC) |
| Max. ambient temp. | 40°C |
| Min. ambient temp. | -20°C |
| Max. temp. rise | 80 K |
| Max altitude, masl | 1000 |
| Torque, Nm | 1,88 |
| Starting torque ratio | 2,30 |
| Pull out torque ratio | 1,80 |
| Starting current ratio | 5,10 |
| Note | IE2 |

| | |
|---|---|
| Efficiency class | IE2 |
| Efficiency, load 100% | 74,1 |
| Efficiency, load 75% | 72,0 |
| Efficiency, load 50% | 65,1 |
| Power fact, load 100% | 0,96 |
| Painting | Standard |
| Color | RAL 9005 |
| Weight kg | 7 |
| Sound pressure Lp dB(A) | 75 |
| Bearing DE | 6202-2Z/C3 |
| Bearing NDE | 6202-2Z/C3 |
| Balance grade | Normal |
| Inertia kgm2 | 0,000497588 |
| Cable entries | 1xM20 |
| Run capacitor, uF | 16 |
| Start Capacitator, uF | 50 |

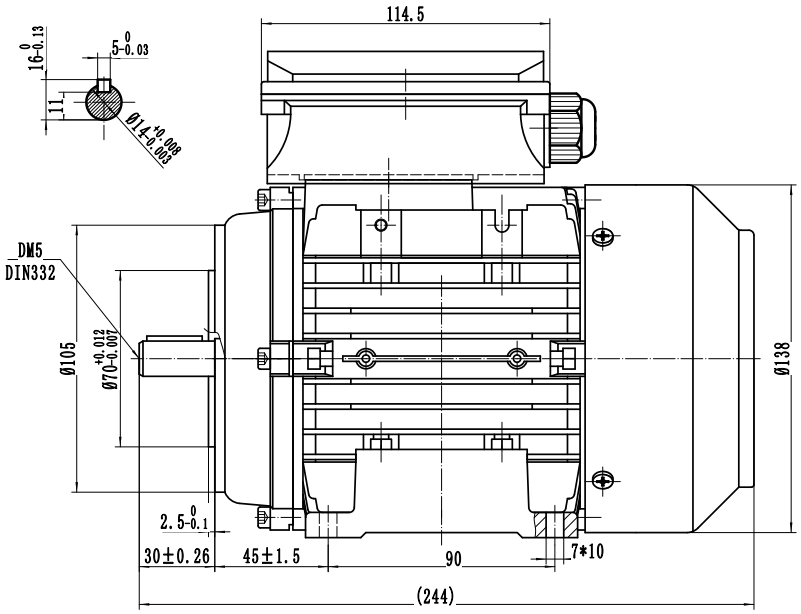


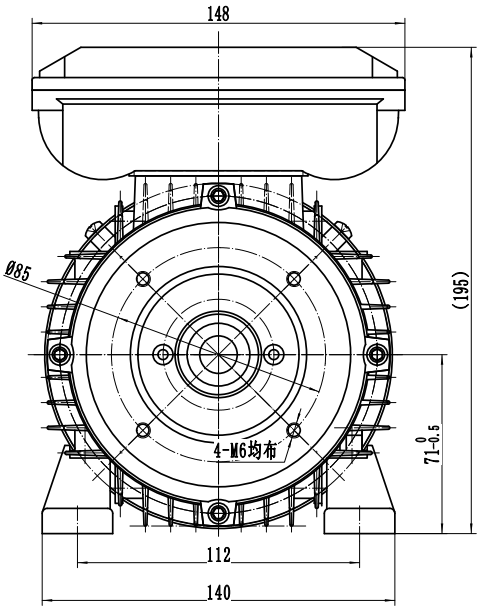



BUSCK
www.busck.eu

Busck & Co AB
Gamla Riksvägen 14
428 32 Göteborg
Sweden
556027-1990
info@busck.se

Busck & Co ApS
Postboks 108
0900 København C
Denmark
info@busck.eu

Busck AS
Skibåsen 35C
4636 Kristiansand
Norway
info@busck.no