MY2-90L-4 1,5KW 230V B14

Single-phase asynchronous motor in aluminum

Motor type	MY2-90L-4 1,5KW 230V B14
Brand	BUSCK
Item number	13040913e

Voltage V	Power kW	Frequency Hz	Current A	Speed rpm
230	1,50	50	7,96	1430

Duty	S1	Efficiency class	IE2
Enclosure	IP55	Efficiency, load 100%	82,8
Insulation class	F	Efficiency, load 75%	81,1
Cooling	IC411 (TEFC)	Efficiency, load 50%	74,6
Max. ambient temp.	40°C	Power fact, load 100%	0,99
Min. ambient temp.	-20°C		
Max. temp. rise	80 K	Painting	Standard
Max altitude, masl	1000	Color	RAL 9005
		Weight kg	17
Torque, Nm	10,02	Sound pressure Lp dB(A)	75
Starting torque ratio	00,30	Bearing DE	6205-2Z/C3
Pull out torque ratio	1,80	Bearing NDE	6205-2Z/C3
Starting current ratio	4,60	Balance grade	Normal
		Inertia kgm2	0,003886656
		Cable entries	1xM20
Note	IE2	Run capacitator, uF	40

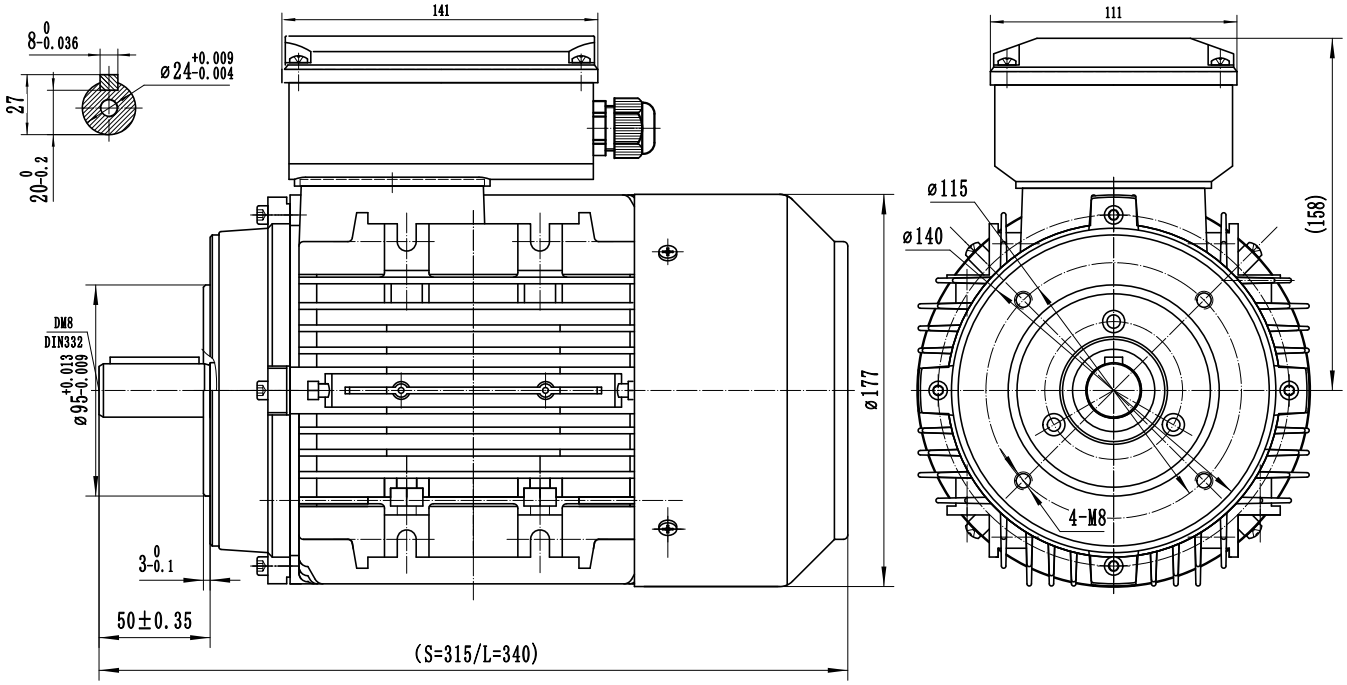

BUSCK
www.busck.eu

Busck & Co AB
Gamla Riksvägen 14
428 32 Göteborg
Sweden
556027-1990
info@busck.se

Busck & Co ApS
Postboks 108
0900 København C
Denmark
info@busck.eu

Busck AS
Skibåsen 35C
4636 Kristiansand
Norway
info@busck.no