MY2-63B-4 0,18KW 230V B35

Single-phase asynchronous motor in aluminum

Motor type	MY2-63B-4 0,18KW 230V B35
Brand	BUSCK
Item number	13040644e

Voltage V	Power kW	Frequency Hz	Current A	Speed rpm
230	0,18	50	1,22	1420

Duty	S1	Efficiency class	IE2
Enclosure	IP55	Efficiency, load 100%	64,7
Insulation class	F	Efficiency, load 75%	57,5
Cooling	IC411 (TEFC)	Efficiency, load 50%	45,3
Max. ambient temp.	40°C	Power fact, load 100%	0,99
Min. ambient temp.	-20°C		
Max. temp. rise	80 K	Painting	Standard
Max altitude, masl	1000	Color	RAL 9005
		Weight kg	5
Torque, Nm	1,21	Sound pressure Lp dB(A)	65
Starting torque ratio	00,51	Bearing DE	6201-2Z/C3
Pull out torque ratio	1,68	Bearing NDE	6201-2Z/C3
Starting current ratio	2,90	Balance grade	Normal
		Inertia kgm2	0,000452377
		Cable entries	1xM16
Note	IE2	Run capacitator, uF	10

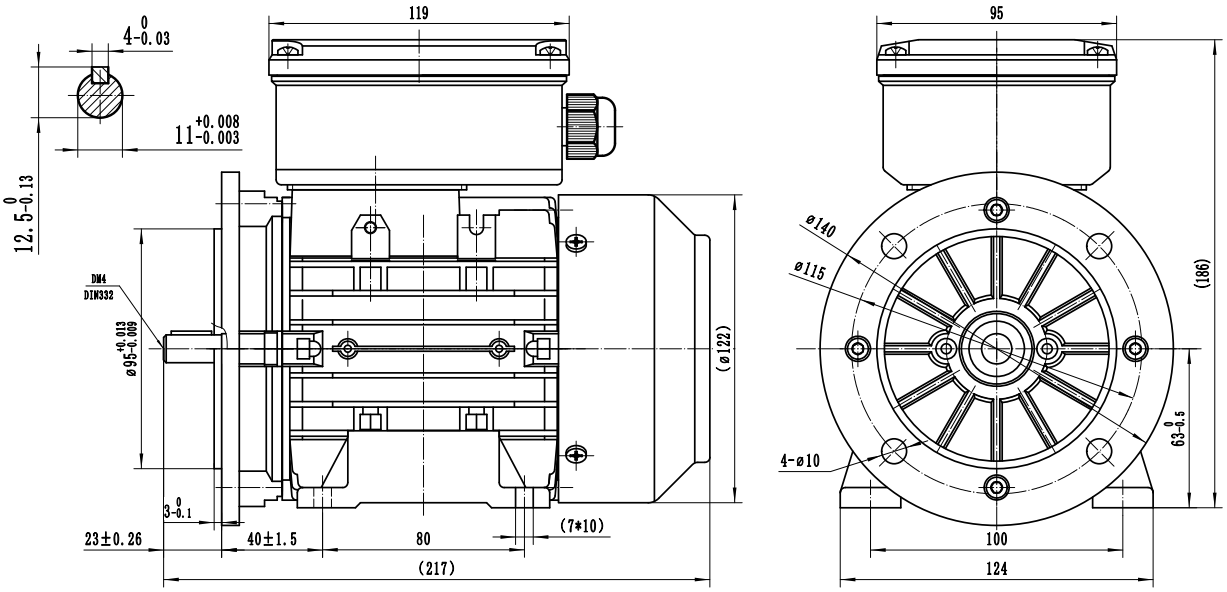

BUSCK
www.busck.eu

Busck & Co AB
Gamla Riksvägen 14
428 32 Göteborg
Sweden
556027-1990
info@busck.se

Busck & Co ApS
Postboks 108
0900 København C
Denmark
info@busck.eu

Busck AS
Skibåsen 35C
4636 Kristiansand
Norway
info@busck.no