MY2-90L-2 2,2KW 230V B35

Single-phase asynchronous motor in aluminum

Motor type	MY2-90L-2 2,2KW 230V B35
Brand	BUSCK
Item number	13020914e

Voltage V	Power kW	Frequency Hz	Current A	Speed rpm
230	2,20	50	11,61	2880

Duty	S1
Enclosure	IP55
Insulation class	F
Cooling	IC411 (TEFC)
Max. ambient temp.	40°C
Min. ambient temp.	-20°C
Max. temp. rise	80 K
Max altitude, masl	1000
Torque, Nm	7,30
Pull out torque ratio	1.8
Starting current ratio	6,10
Note	IE2

Efficiency class	IE2
Efficiency, load 100%	83,2
Efficiency, load 75%	82,9
Efficiency, load 50%	77,7
Power fact, load 100%	0,99
Painting	Standard
Color	RAL 9005
Weight kg	18
Sound pressure Lp dB(A)	80
Bearing DE	6205-2Z/C3
Bearing NDE	6205-2Z/C3
Balance grade	Normal
Inertia kgm2	0,001982528
Cable entries	1xM20
Run capacitator, uF	60

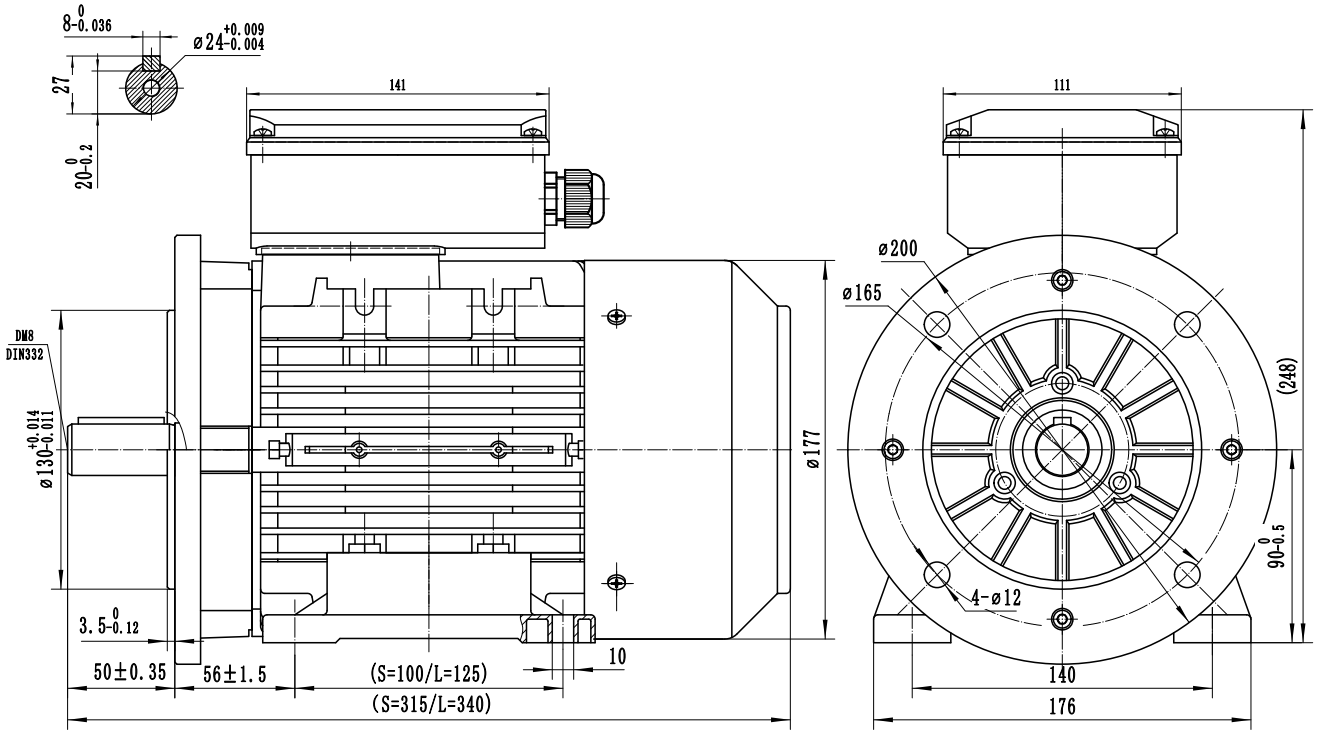

BUSCK
www.busck.eu

Busck & Co AB
Gamla Riksvägen 14
428 32 Göteborg
Sweden
556027-1990
info@busck.se

Busck & Co ApS
Postboks 108
0900 København C
Denmark
info@busck.eu

Busck AS
Skibåsen 35C
4636 Kristiansand
Norway
info@busck.no