MY2-71C-2 0,75KW 230V B34

Single-phase asynchronous motor in aluminum

Motor type	MY2-71C-2 0,75KW 230V B34
Brand	BUSCK
Item number	13020735e

Voltage V	Power kW	Frequency Hz	Current A	Speed rpm

Duty	S1		
Enclosure	IP55		
Insulation class	F	Painting	Standard
Cooling	IC411 (TEFC)	Color	RAL 9005
Max. ambient temp.	40°C	Weight kg	9
Min. ambient temp.	-20°C	Bearing DE	6202-2Z/C3
Max. temp. rise	80 K	Bearing NDE	6202-2Z/C3
Max altitude, masl	1000	Balance grade	Normal
		Cable entries	1xM20

Note	IE2

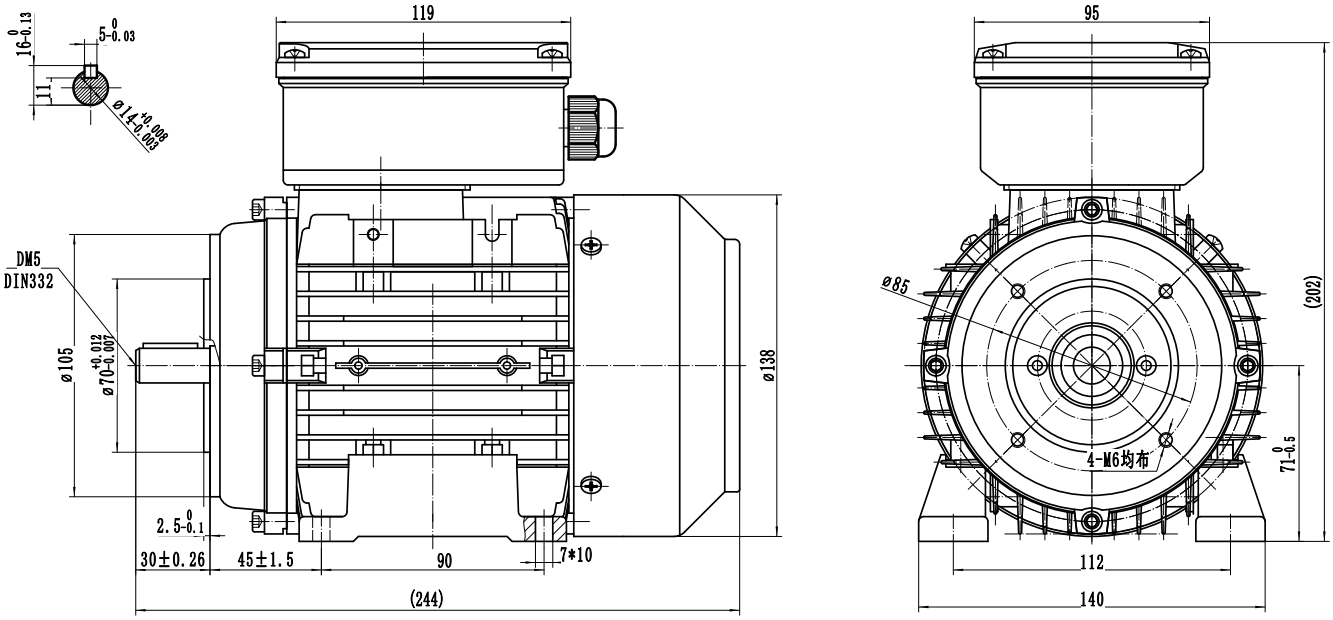

BUSCK
www.busck.eu

Busck & Co AB
Gamla Riksvägen 14
428 32 Göteborg
Sweden
556027-1990
info@busck.se

Busck & Co ApS
Postboks 108
0900 København C
Denmark
info@busck.eu

Busck AS
Skibåsen 35C
4636 Kristiansand
Norway
info@busck.no