MS63B-2 0,25KW 500V B5

Three-phase asynchronous motor in aluminum

Motor type	MS63B-2 0,25KW 500V B5
Brand	BUSCK
Item number	03C20642

Voltage V	Power kW	Frequency Hz	Current A	Speed rpm
500	0,25	50	0,65	2780
575	,29	60	0,65	3336

Duty	S1	Efficiency class	IE1
Enclosure	IP55	Efficiency, load 100%	69,8
Insulation class	F	Efficiency, load 75%	68,8
Cooling	IC411 (TEFC)	Efficiency, load 50%	62,8
Max. ambient temp.	40°C	Power fact, load 100%	0,79
Min. ambient temp.	-20°C		
Max. temp. rise	80 K	Painting	Standard
Max altitude, masl	1000	Color	RAL 9005
		Weight kg	4,2
Torque, Nm	0,86	Sound pressure Lp dB(A)	61
Starting torque ratio	2,6	Bearing DE	6201-2Z/C3
Pull up torque ratio	2,4	Bearing NDE	6201-2Z/C3
Pull out torque ratio	2,5	Balance grade	Normal
Starting current ratio	4,3	Inertia kgm2	0,000171
		Cable entries	1xM20
Note	Termokontakter		

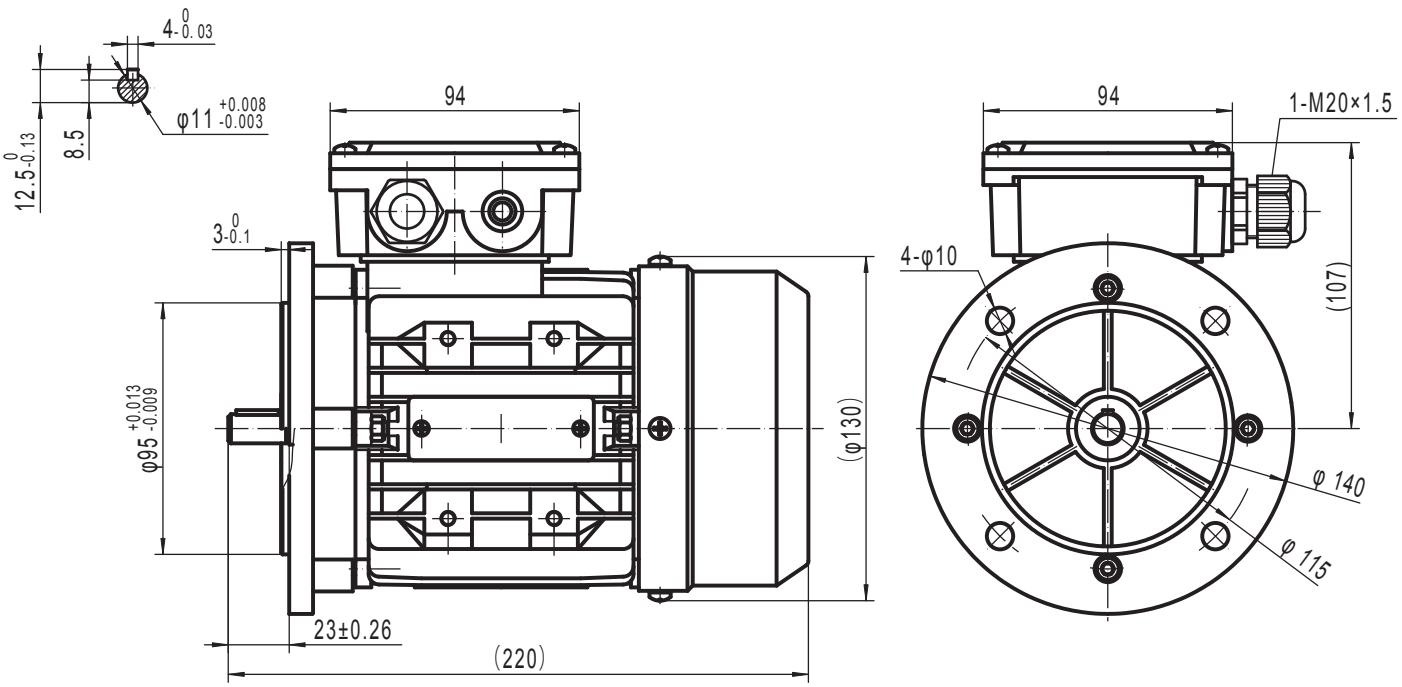

BUSCK
www.busck.eu

Busck & Co AB
Gamla Riksvägen 14
428 32 Göteborg
Sweden
556027-1990
info@busck.se

Busck & Co ApS
Postboks 108
0900 København C
Denmark
info@busck.eu

Busck AS
Skibåsen 35C
4636 Kristiansand
Norway
info@busck.no