MS71B-2 0,55KW 400/690V B35

Three-phase asynchronous motor in aluminum

Motor type	MS71B-2 0,55KW 400/690V B35
Brand	BUSCK
Item number	03B20724

Voltage V	Power kW	Frequency Hz	Current A	Speed rpm
400	0,55	50	1,42	2760
690	0,55	50	0,82	2760
460	0,63	60	1,42	3312

Duty	S1	Efficiency class	IE1
Enclosure	IP55	Efficiency, load 100%	71
Insulation class	F	Efficiency, load 75%	70
Cooling	IC411 (TEFC)	Efficiency, load 50%	64
Max. ambient temp.	40°C	Power fact, load 100%	0,79
Min. ambient temp.	-20°C		
Max. temp. rise	80 K	Painting	Standard
Max altitude, masl	1000	Color	RAL 9005
		Weight kg	6
Torque, Nm	1,9	Sound pressure Lp dB(A)	64
Starting torque ratio	2,2	Bearing DE	6202-2Z/C3
Pull up torque ratio	1,6	Bearing NDE	6202-2Z/C3
Pull out torque ratio	2,4	Balance grade	Normal
Starting current ratio	6	Inertia kgm2	0,000384
		Cable entries	1xM20

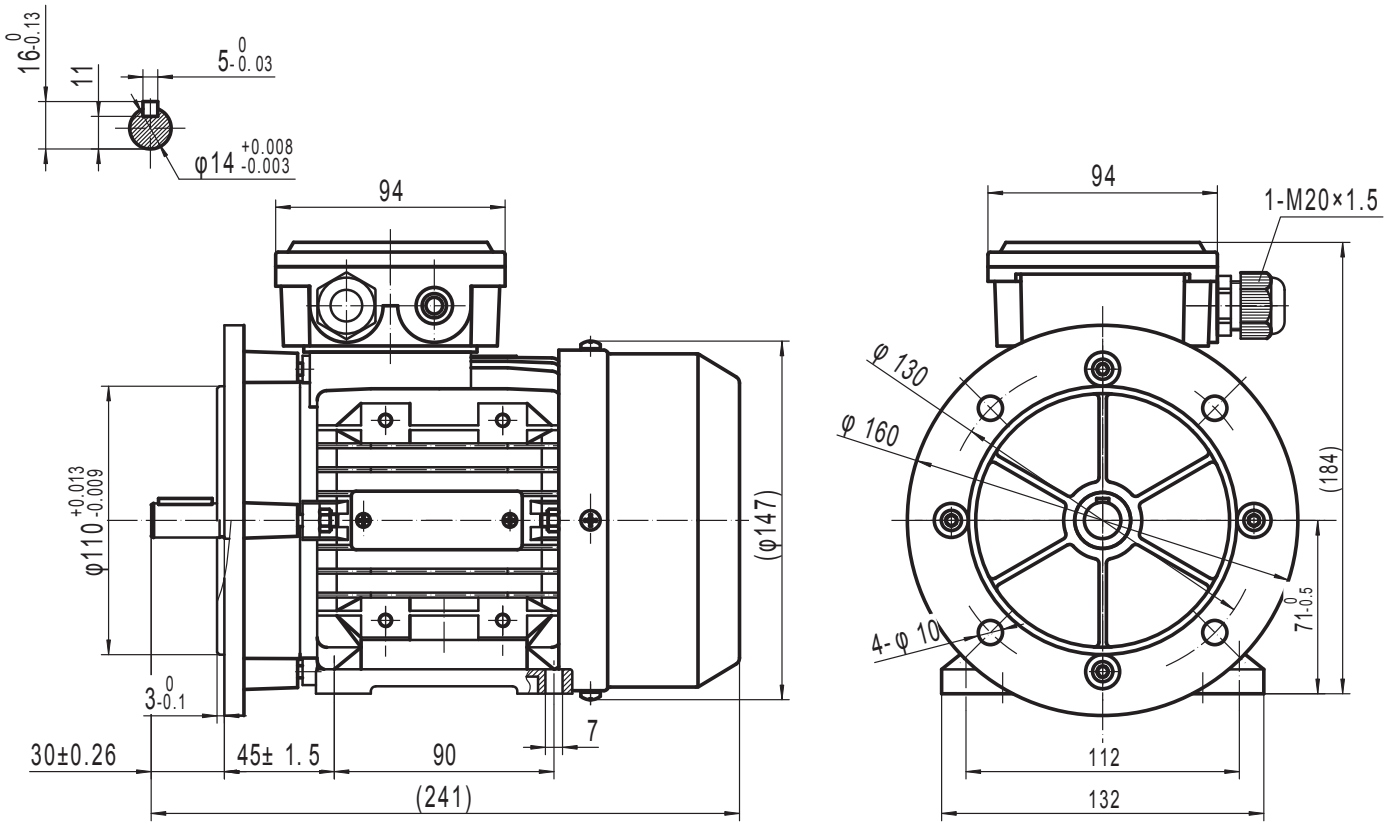

BUSCK
www.busck.eu

Busck & Co AB
Gamla Riksvägen 14
428 32 Göteborg
Sweden
556027-1990
info@busck.se

Busck & Co ApS
Postboks 108
0900 København C
Denmark
info@busck.eu

Busck AS
Skibåsen 35C
4636 Kristiansand
Norway
info@busck.no