Y2-355MA-6 160KW 230/400V B5

Three-phase asynchronous motor in cast iron

Motor type	Y2-355MA-6 160KW 230/400V B5
Brand	BUSCK
Item number	03A63552

Voltage V	Power kW	Frequency Hz	Current A	Speed rpm
230	160	50	396,0	990
400	160	50	227,7	990
460	184	60	227,7	1188

Duty	S1		
Enclosure	IP55	Efficiency, load 100%	94,5
Insulation class	F	Power fact, load 100%	0,86
Cooling	IC411 (TEFC)		
Max. ambient temp.	40°C	Painting	Standard
Min. ambient temp.	-20°C	Color	RAL 9005
Max. temp. rise	80 K	Weight kg	1600
Max altitude, masl	1000	Sound pressure Lp dB(A)	92
		Balance grade	Normal
Starting current ratio	6,7		

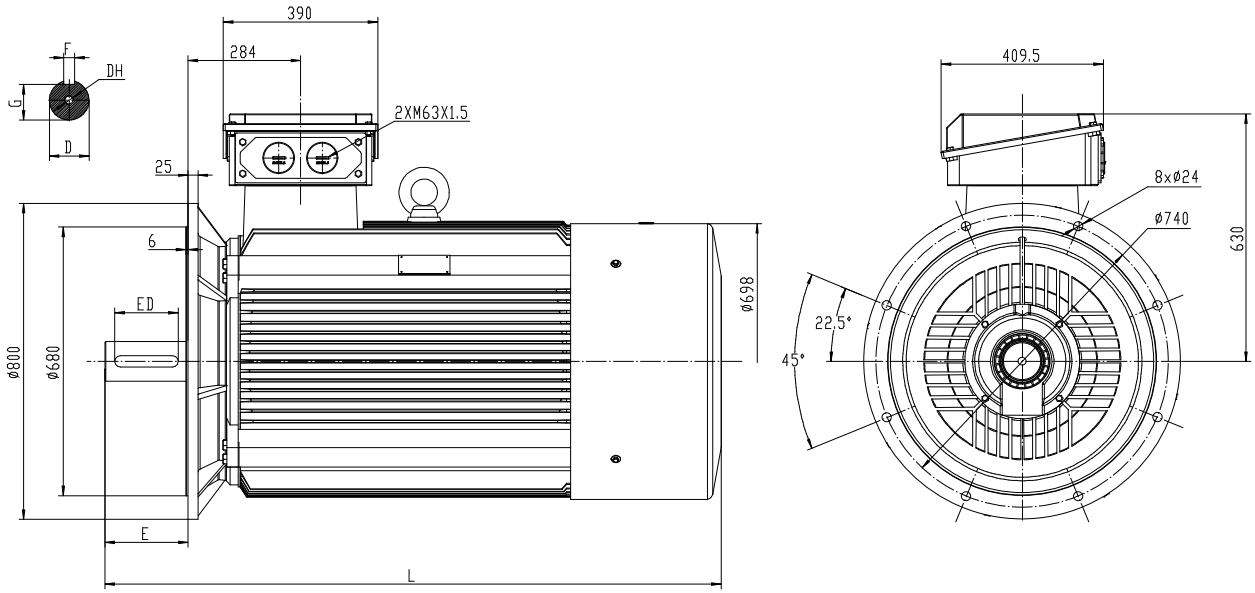

TYPE	D	E	F	G	DH	ED	L	
Y2-355M/L-2P	ø75	140	$20^{0}_{-0.043}$	68	M20x42	110	1500	
Y2-355M/L-4/6/8P	ø95	170	$25^{0}_{-0.052}$	86	M24x50	140	1530	short shaft
Y2-355M/L-4/6/8P	ø100	210	$28^{0}_{-0.052}$	90	M24x50	160	1570	Long shaft

BUSCK
www.busck.eu

Busck & Co AB
Gamla Riksvägen 14
428 32 Göteborg
Sweden
556027-1990
info@busck.se

Busck & Co ApS
Postboks 108
0900 København C
Denmark
info@busck.eu

Busck AS
Skibåsen 35C
4636 Kristiansand
Norway
info@busck.no