MS132MB-6 5,5KW 230/400V B35

Three-phase asynchronous motor in aluminum

Motor type	MS132MB-6 5,5KW 230/400V B35
Brand	BUSCK
Item number	03A61344

Voltage V	Power kW	Frequency Hz	Current A	Speed rpm
230	5,5	50	21,6	960
400	5,5	50	12,42	960
460	6,33	60	12,42	1152

Duty	S1	Efficiency class	EFF2
Enclosure	IP55	Efficiency, load 100%	83
Insulation class	F	Power fact, load 100%	0,77
Cooling	IC411 (TEFC)		
Max. ambient temp.	40°C	Painting	Standard
Min. ambient temp.	-20°C	Color	RAL 9005
Max. temp. rise	80 K	Weight kg	50,7
Max altitude, masl	1000	Sound pressure Lp dB(A)	68
		Bearing DE	6308-2Z/C3
Torque, Nm	54,71	Bearing NDE	6208-2Z/C3
Starting torque ratio	2	Balance grade	Normal
Pull up torque ratio	1,3	Inertia kgm2	0,0461
Pull out torque ratio	2	Cable entries	2xM25
Starting current ratio	6,5		

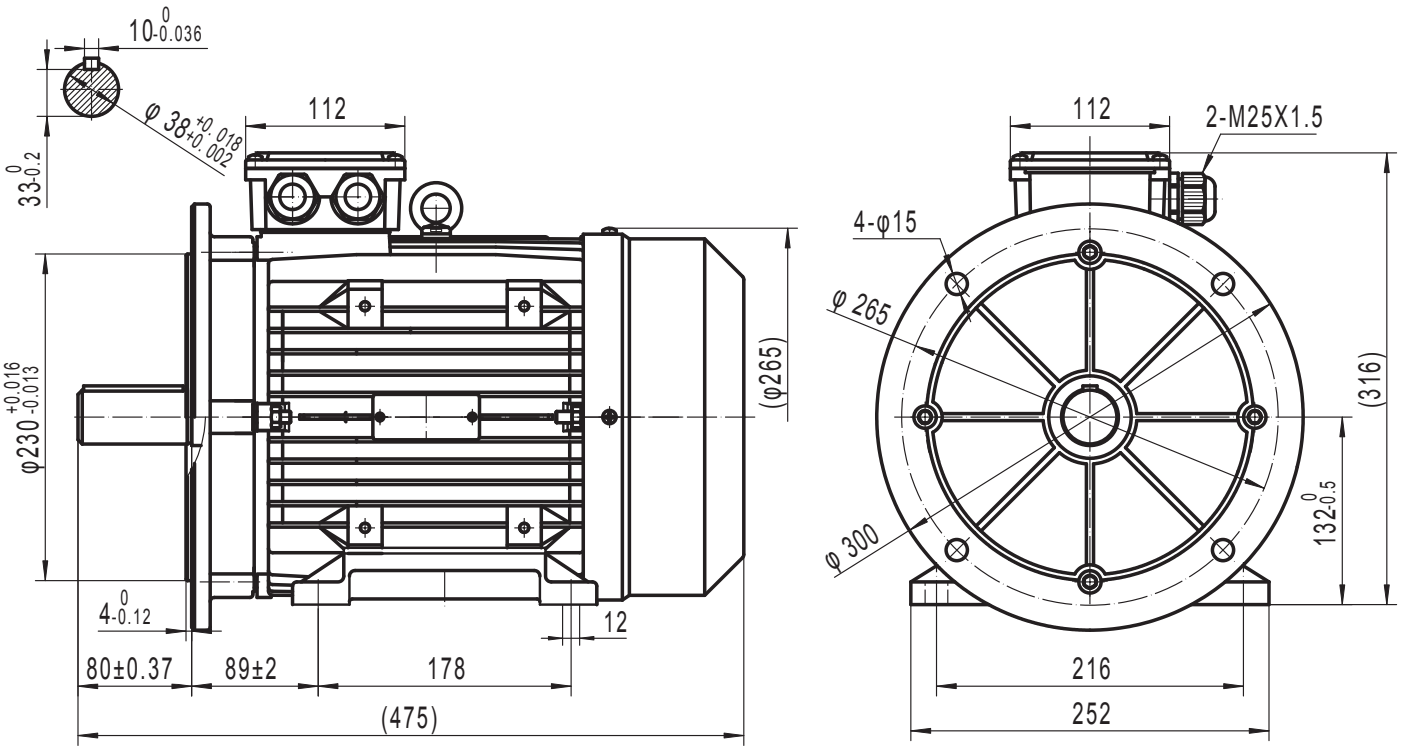

BUSCK
www.busck.eu

Busck & Co AB
Gamla Riksvägen 14
428 32 Göteborg
Sweden
556027-1990
info@busck.se

Busck & Co ApS
Postboks 108
0900 København C
Denmark
info@busck.eu

Busck AS
Skibåsen 35C
4636 Kristiansand
Norway
info@busck.no