MS112M-4 4,6KW 230/400V SVART B5

Three-phase asynchronous motor in aluminum

Motor type	MS112M-4 4,6KW 230/400V SVART B5
Brand	BUSCK
Item number	03A41122HTCS

Voltage V	Power kW	Frequency Hz	Current A	Speed rpm
230	4,6	50	16,5	1430
400	4,6	50	9,50	1430
460	5,29	60	9,50	1716

Duty	S3-40% / S6-60%		
Enclosure	IP55	Power fact, load 100%	0,83
Insulation class	F		
Cooling	IC411 (TEFC)	Painting	Standard
Max. ambient temp.	40°C	Color	RAL 9005
Min. ambient temp.	-20°C	Weight kg	29
Max. temp. rise	80 K	Sound pressure Lp dB(A)	65
Max altitude, masl	1000	Bearing DE	6306-2Z/C3
		Bearing NDE	6206-2Z/C3
Torque, Nm	30,7	Balance grade	Normal
Starting torque ratio	1,9	Inertia kgm2	0,0107
Pull out torque ratio	1,9	Cable entries	2xM25
Starting current ratio	6,1		

Note

Tolerans på axelns kast 0,03 mm
Svart färg RAL 9005 halvmatt
Endast en kabelförskruvning
S3-40%

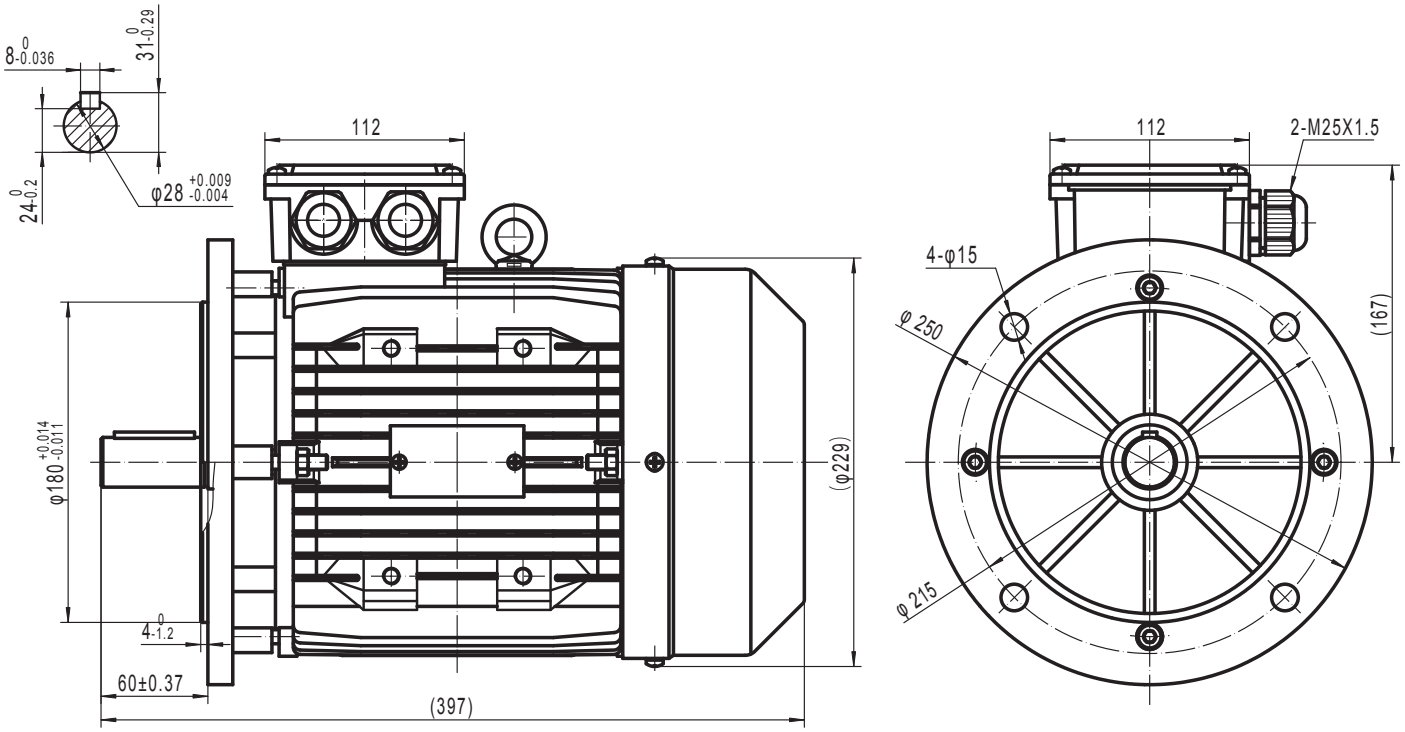

BUSCK
www.busck.eu

Busck & Co AB
Gamla Riksvägen 14
428 32 Göteborg
Sweden
556027-1990
info@busck.se

Busck & Co ApS
Postboks 108
0900 København C
Denmark
info@busck.eu

Busck AS
Skibåsen 35C
4636 Kristiansand
Norway
info@busck.no